SICK.COM



DATA SHEET

IME18-12BNOZW2K

IME
Inductive proximity sensors

SICK
Sensor Intelligence



INDUCTIVE PROXIMITY SENSORS

IME18-12BNOZW2K

ORDERING INFORMATION

Type	part no.
IME18-12BNOZW2K	1071249

Further device versions and accessories at www.sick.com/IME

DETAILED TECHNICAL DATA

FEATURES

Housing	Metric
Housing	Short-body
Thread size	M18 x 1
Diameter	Ø 18 mm
Sensing range S_n	12 mm
Safe sensing range S_a	9.72 mm
Installation type	Quasi-flush
Switching frequency	500 Hz
Connection type	Cable, 3-wire, 2 m
Switching output	NPN
Switching output detail	NPN
Output function	NC
Electrical wiring	DC 3-wire
Enclosure rating	IP67 [1]
Special features	Triple sensing range
Items supplied	Mounting nut, brass, nickel-plated (2x)

[1] According to EN 60529.

MECHANICS/ELECTRONICS

Supply voltage	10 V DC ... 30 V DC
Ripple	≤ 10 %
Voltage drop	≤ 2 V [1]

[1] At I_a max.

[2] Supply voltage U_a and constant ambient temperature Ta.

[3] Of Sr.

Time delay before availability	≤ 50 ms
Hysteresis	1 % ... 15 %
Reproducibility	≤ 5 % [2] [3]
Temperature drift (of S_r)	± 10 %
EMC	According to EN 60947-5-2
Continuous current I_a	≤ 200 mA
No load current	≤ 10 mA
Cable material	PVC
Conductor size	0.25 mm²
Cable diameter	Ø 3.9 mm
Short-circuit protection	✓
Power-up pulse protection	✓
Shock and vibration resistance	30 g, 11 ms/10 Hz ... 55 Hz, 1 mm
Ambient operating temperature	–25 °C ... +75 °C
Ambient temperature, storage	–25 °C ... +75 °C
Housing material	Brass, nickel-plated
Sensing face material	Plastic, PA 66
Housing length	48 mm
Thread length	33 mm
Tightening torque, max.	≤ 30 Nm
UL File No.	NRKH.E181493

[1] At I_a max.

[2] Supply voltage U_B and constant ambient temperature Ta.

[3] Of Sr.

SAFETY-RELATED PARAMETERS

$MTTF_D$	1,735 years
DC_{avg}	0 %

REDUCTION FACTORS

Note	The values are reference values which may vary
St37 steel (Fe)	1
Stainless steel (V2A, 304)	Approx. 0.78
Aluminum (Al)	Approx. 0.43
Copper (Cu)	Approx. 0.35
Brass (Br)	Approx. 0.47

INSTALLATION NOTE

Remark	Associated graphic see "Installation note"
A	13.5 mm
B	35 mm
C	18 mm
D	36 mm
E	4 mm
F	120 mm

CERTIFICATES

EU declaration of conformity	✓
UK declaration of conformity	✓
ACMA declaration of conformity	✓
Moroccan declaration of conformity	✓
China RoHS	✓
China Compulsory Product Certification (CCC) exempt	✓
cULus certificate	✓

INSTALLATION NOTE QUASI-FLUSH INSTALLATION

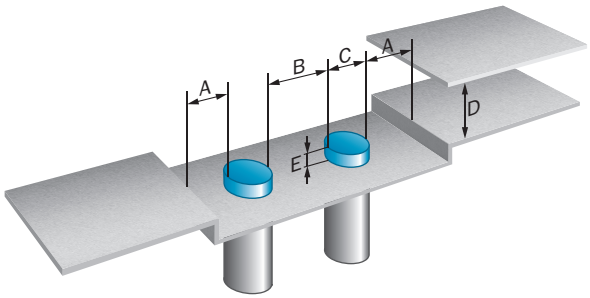

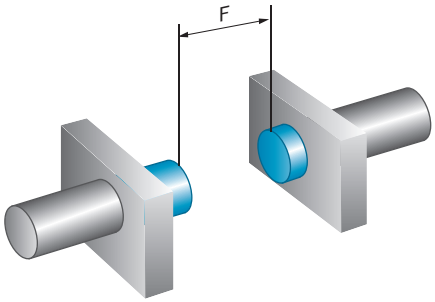

CONNECTION DIAGRAM CD-003

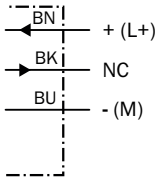

DIMENSIONAL DRAWING IME18 SHORT-BODY HOUSING, CABLE, FLUSH

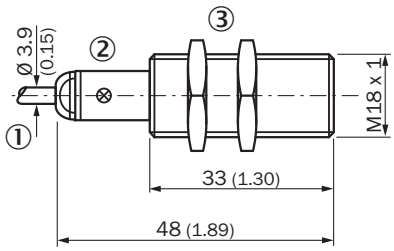

Dimensions in mm (inch)
① Connection
② Display LED
③ Fastening nuts (2x); width across 24, metal

Further information as well as suitable accessories, example applications and downloads such as CAD dimensional models, operating instructions and software can be found at www.sick.com/1071249

SICK AG
WALDKIRCH
GERMANY
SICK.COM

SICK AT A GLANCE

SICK is a leading global technology company for intelligent sensors and integrated solutions in industrial automation. Our technologies set benchmarks, making your industrial processes more efficient, safer and more sustainable – both in logistics and manufacturing operations.

SICK combines sensor intelligence with industry expertise and certified consulting services. We provide the ideal foundation for scalable as well as tailor-made automation solutions and create added value along the entire value chain. Our close partnerships with our customers are more than just a promise: Together, we optimize productivity, improve quality, protect health and safety, and help build a sustainable future. All with empathy and trust.

Since 1946, we have been developing innovative technologies with passion and a pioneering spirit. With a global network in around 40 countries, SICK has a global presence and is always close by. The company's headquarters are located in Waldkirch near Freiburg, Germany. Our customers benefit from our understanding of both local and global requirements, which enables us to deliver tailor-made solutions

SICK

Sensor Intelligence