SICK.COM



DATA SHEET

WTB250-2P2431

W250
Photoelectric sensors

SICK
Sensor Intelligence



Illustration may differ

PHOTOELECTRIC SENSORS

WTB250-2P2431

ORDERING INFORMATION

Type	part no.
WTB250-2P2431	6044675

Further device versions and accessories at www.sick.com/W250

DETAILED TECHNICAL DATA

FEATURES

Functional principle	Photoelectric proximity sensor
Functional principle detail	Background suppression
Dimensions (W x H x D)	20 mm x 65 mm x 43.9 mm
Housing design (light emission)	Rectangular
Sensing range max.	100 mm ... 300 mm [1]
Sensing range	100 mm ... 300 mm [1]
Focus	Approx. 3°
Type of light	Visible red light
Light source	LED [2]
Light spot size (distance)	Ø 30 mm (300 mm)
Angle of dispersion	Approx. 3°
Adjustment	Potentiometer, 2 turns [3] Potentiometer, 2 rotations

[1] Object with 90% remission (based on standard white, DIN 5033).

[2] Average service life: 100,000 h at T_U = +25 °C.

[3] With position indicator.

MECHANICS/ELECTRONICS

Supply voltage U_B	10 V DC ... 30 V DC [1]
Ripple	< 5 V_{pp} [2]
Current consumption	35 mA [3]
Switching output	PNP
Switching mode	Light/dark switching
Switching mode selector	Selectable via L/D control cable
Output current $I_{max.}$	≤ 100 mA
Response time	≤ 3 ms [4]
Switching frequency	160 Hz [5]
Connection type	Male connector M12, 4-pin [6]
Circuit protection	A [7] B [8] C [9] D [10]
Protection class	III
Weight	40 g
Housing material	Plastic, ABS
Optics material	Plastic, PMMA
Enclosure rating	IP67
Items supplied	BEF-W250 mounting bracket
Electromagnetic compatibility (EMC)	EN 60947-5-2 [11]
Ambient operating temperature	–25 °C ... +55 °C
Ambient temperature, storage	–40 °C ... +70 °C
UL File No.	NRKH2.E300503 & NRKH8.E300503

[1] Limit values when operated in short-circuit protected network: max. 8 A.

[2] May not fall below or exceed U_V tolerances.

[3] Without load.

[4] Signal transit time with resistive load.

[5] With light/dark ratio 1:1.

[6] Rotatable through 90°.

[7] A = V_S connections reverse-polarity protected.

[8] B = inputs and output reverse-polarity protected.

[9] C = interference suppression.

[10] D = outputs overcurrent and short-circuit protected.

[11] The AC/DC devices comply with the Radio Safety Requirements for the industrial sector (Radio Safety Class A). They may cause radio interference if used in a residential area.

SAFETY-RELATED PARAMETERS

$MTTF_D$	516 years
DC_{avg}	0 %

CERTIFICATES

EU declaration of conformity	✓
UK declaration of conformity	✓
ACMA declaration of conformity	✓

Moroccan declaration of conformity	✓
China RoHS	✓
China Compulsory Product Certification (CCC) exempt	✓
cRUus certificate	✓
Photobiological safety (DIN EN 62471) certificate	✓

ADJUSTMENTS WTB250-2

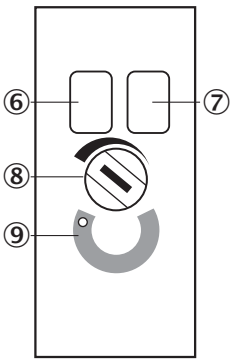

⑥ LED indicator green: Stability indicator
⑦ LED indicator yellow: Status of received light beam
⑧ Sensing range adjustment: potentiometer
⑨ Position indicator for sensitivity setting (270°)

CONNECTION DIAGRAM CD-087

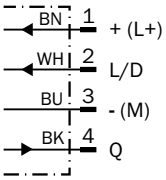

CHARACTERISTIC CURVE WTB250-2, 300 MM

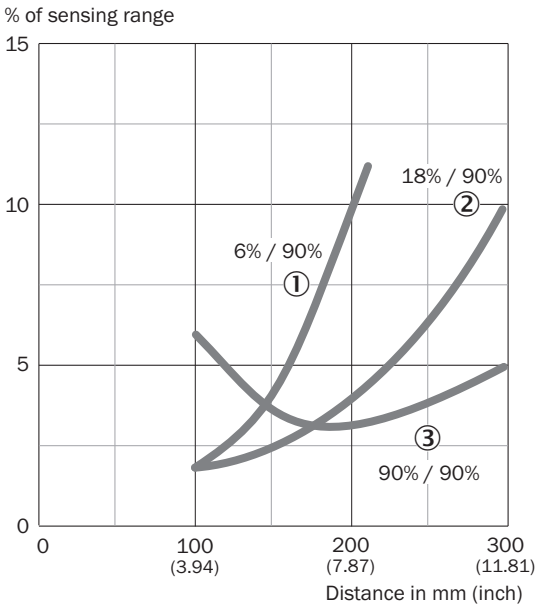

① sensing range on black, white background
② sensing range on gray, white background
③ sensing range on white, white background

SENSING RANGE DIAGRAM WTB250-2, 300 MM

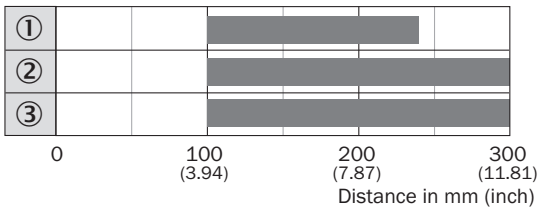

Sensing range

① sensing range on black, white background
② sensing range on gray, white background
③ sensing range on white, white background

DIMENSIONAL DRAWING WTB250-2, DC, CONNECTOR

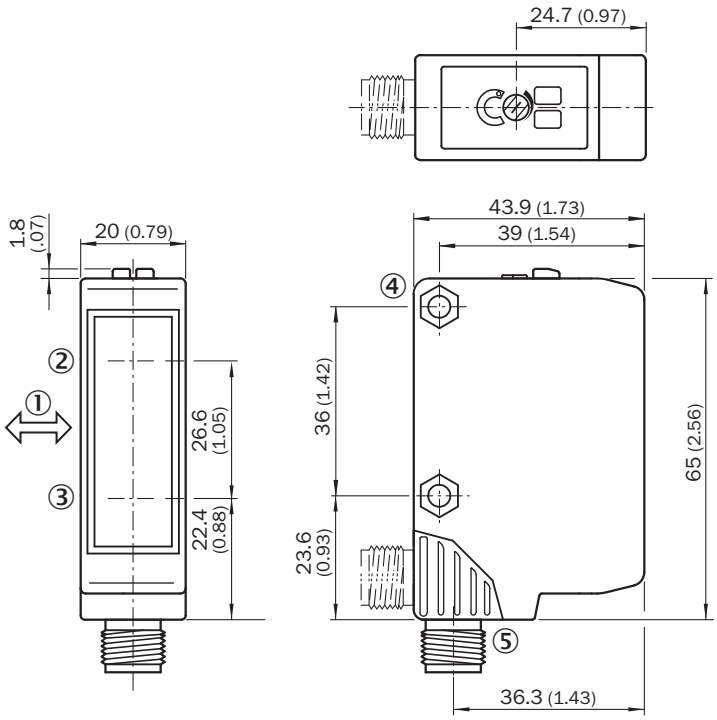

Dimensions in mm (inch)
① Standard direction of the material being detected
② Axis of sender
③ axis of receiver
④ mounting hole ø 4.2 mm, for M4 hexagon nuts on both sides
⑤ Connector M12, 4-pin:
⑤ Connector position rotatable by 90° (V>H);
⑤ V: Vertikal final position;
⑤ H: Horizontal final position, can be locked with slider

Further information as well as suitable accessories, example applications and downloads such as CAD dimensional models, operating instructions and software can be found at www.sick.com/6044675

SICK AG
WALDKIRCH
GERMANY
SICK.COM

SICK AT A GLANCE

SICK is a leading global technology company for intelligent sensors and integrated solutions in industrial automation. Our technologies set benchmarks, making your industrial processes more efficient, safer and more sustainable – both in logistics and manufacturing operations.

SICK combines sensor intelligence with industry expertise and certified consulting services. We provide the ideal foundation for scalable as well as tailor-made automation solutions and create added value along the entire value chain. Our close partnerships with our customers are more than just a promise: Together, we optimize productivity, improve quality, protect health and safety, and help build a sustainable future. All with empathy and trust.

Since 1946, we have been developing innovative technologies with passion and a pioneering spirit. With a global network in around 40 countries, SICK has a global presence and is always close by. The company's headquarters are located in Waldkirch near Freiburg, Germany. Our customers benefit from our understanding of both local and global requirements, which enables us to deliver tailor-made solutions

SICK

Sensor Intelligence