SICK.COM



DATA SHEET

IMS12-04BPSVU2S

IMS
Inductive proximity sensors

SICK Sensor Intelligence



INDUCTIVE PROXIMITY SENSORS

IMS12-04BPSVU2S

ORDERING INFORMATION

Type	part no.
IMS12-04BPSVU2S	1097579

Further device versions and accessories at www.sick.com/IMS

DETAILED TECHNICAL DATA

FEATURES

Housing	Metric
Housing	Standard design
Thread size	M12 x 1
Diameter	Ø 12 mm
Sensing range S_n	4 mm
Safe sensing range S_a	3.24 mm
Installation type	Flush
Switching frequency	2,000 Hz
Connection type	Cable, 3-wire, 2 m
Switching output	PNP
Switching output detail	PNP
Output function	NO
Electrical wiring	DC 3-wire
Enclosure rating	IP68 [1] IP69K [2]
Special features	Resistant against coolant lubricants, Temperature resistance
Special applications	Mobile machines, Zones with coolants and lubricants, Difficult application conditions
Items supplied	Mounting nut, brass, nickel-plated (2x)

[1] According to EN 60529.

[2] According to ISO 20653:2013-03.

MECHANICS/ELECTRONICS

Supply voltage	7.2 V DC ... 60 V DC
Ripple	≤ 10 %
Voltage drop	≤ 2.5 V [1]
Time delay before availability	100 ms
Hysteresis	3 % ... 20 %
Reproducibility	≤ 2 % [2]
Temperature drift (of S_r)	± 10 %
EMC	Emitted interference and interference immunity in accordance with Motor Insurance Directive ECE-R10 Rev. 5: E1-Type approval Interference immunity in accordance with DIN ISO 11452-2: 100 V/m AM vertical 20 MHz - 800 MHz; AM horizontal 200 MHz - 800 MHz; PM vertical/horizontal 800 MHz - 2.7 GHz Conducted disturbances in accordance with ISO 7637-2 (pulse/severity/failure criterion 12 V/failure criterion 24 V): 1/IV/C/C, 2a/IV/A/A, 2b/IV/C/C, 3a/IV/A/A, 3b/IV/A/A, 4/IV/C/A, 5a/IV/B/B, 5b/IV/B/B EN 61000-4-2 ESD: 4 kV CD / 8 kV AD EN 61000-4-3 HF radiated: 10 V/m EN 61000-4-4 burst: 2 kV EN 61000-4-5 surge: 0,5 kV L-to-L, Ri: 2 Ohm EN 61000-4-6 HF wire-bound: 10 V
Environmental test	Quick temperature change EN 60068-2-14, Na: TA = –25 °C, TB = 75 °C, t1 = 40 min, t2 = < 10 s, 300 cycles, Delta S_r ≤ 10%
Corrosion test	Salt spray test EN 60068-2-52: severity 5, 4 cycles
Continuous current I_a	≤ 200 mA [3]
No load current	≤ 10 mA
Cable material	PUR
Conductor size	0.5 mm²
Cable diameter	Ø 5 mm
Short-circuit protection	✓
Power-up pulse protection	✓
Shock and vibration resistance	Vibration resistance EN 60068-2-6 Fc: 25 g peak (10 Hz ... 2,000 Hz) / –20 °C ... +50 °C Shock resistance EN 60068-2-27 Ea: 100 g 11 ms; 3 shocks in every direction of the 3 coordinate axes / –40 °C ... +85 °C Continuous shock resistance EN 60068-2-29 Eb: 40 g 3 ms rise, 7 ms fall / 5,000 shocks in every direction of the 3 coordinate axes / -20 °C ... +50 °C Broadband noise EN 60068-2-64: 15 g rms (5 Hz ... 2,000 Hz) / 8 hours in every direction of the 3 coordinate axes / –40 °C ... +85 °C
Ambient operating temperature	–40 °C ... +100 °C
Housing material	Stainless steel V2A, DIN 1.4305 / AISI 303
Sensing face material	Plastic, LCP
Housing length	56 mm
Thread length	51 mm
Tightening torque, max.	Typ. 20 Nm
Protection class	III
UL File No.	E181493

[1] At I_a max.

[2] Supply voltage U_B and constant ambient temperature Ta.

[3] See “Continuous current I_a above temperature” characteristic curve.

SAFETY-RELATED PARAMETERS

$MTTF_D$	1,196 years
DC_{avg}	0 %

REDUCTION FACTORS

Note	The values are reference values which may vary
Stainless steel (V2A, 304)	Approx. 0.65
Aluminum (Al)	Approx. 0.35
Copper (Cu)	Approx. 0.24
Brass (Br)	Approx. 0.38

INSTALLATION NOTE

Remark	Associated graphic see "Installation"
B	12 mm
C	12 mm
D	12 mm
F	32 mm

CERTIFICATES

EU declaration of conformity	✓
UK declaration of conformity	✓
ACMA declaration of conformity	✓
Moroccan declaration of conformity	✓
China RoHS	✓
CCC certificate	✓
cULus certificate	✓
ECE test certificate	✓

INSTALLATION NOTE FLUSH INSTALLATION

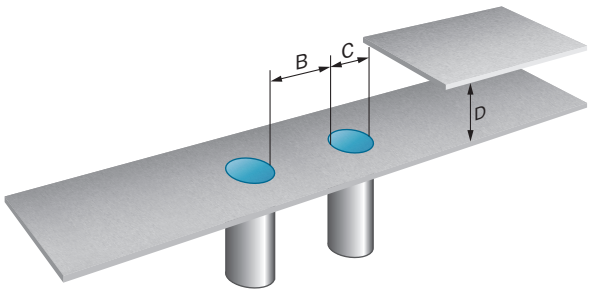

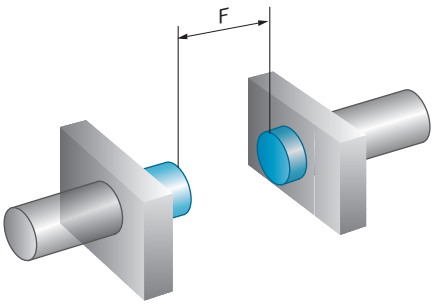

CONNECTION DIAGRAM CD-001

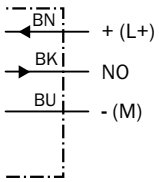

TEMPERATURE DERATING

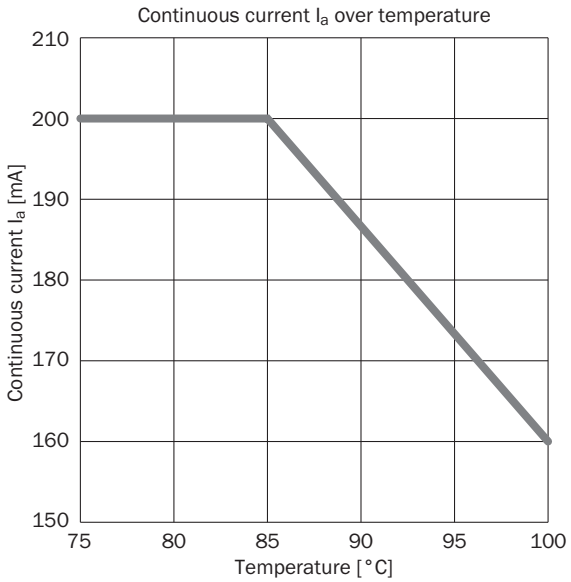

RESPONSE DIAGRAM

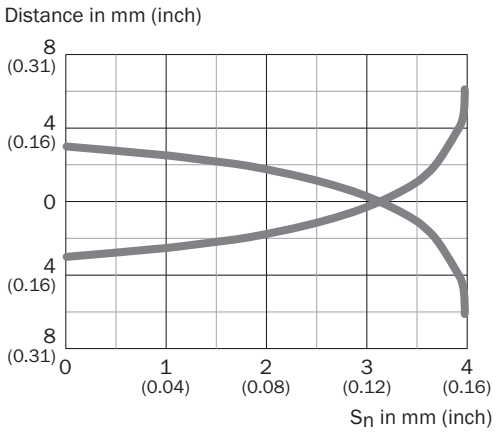

DIMENSIONAL DRAWING IMS12, V2A, FLUSH

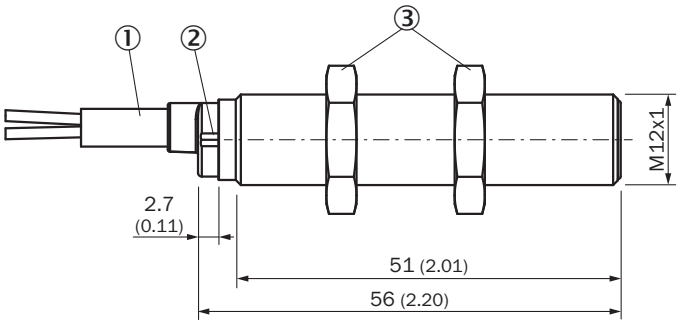

Dimensions in mm (inch)
① Connection
② Display LED
③ fastening nuts (2x); width across 17, brass nickel-plated

Further information as well as suitable accessories, example applications and downloads such as CAD dimensional models, operating instructions and software can be found at www.sick.com/1097579



SICK AG
WALDKIRCH
GERMANY
SICK.COM

SICK AT A GLANCE

SICK is a leading global technology company for intelligent sensors and integrated solutions in industrial automation. Our technologies set benchmarks, making your industrial processes more efficient, safer and more sustainable – both in logistics and manufacturing operations.

SICK combines sensor intelligence with industry expertise and certified consulting services. We provide the ideal foundation for scalable as well as tailor-made automation solutions and create added value along the entire value chain. Our close partnerships with our customers are more than just a promise: Together, we optimize productivity, improve quality, protect health and safety, and help build a sustainable future. All with empathy and trust.

Since 1946, we have been developing innovative technologies with passion and a pioneering spirit. With a global network in around 40 countries, SICK has a global presence and is always close by. The company's headquarters are located in Waldkirch near Freiburg, Germany. Our customers benefit from our understanding of both local and global requirements, which enables us to deliver tailor-made solutions

SICK

Sensor Intelligence