SICK.COM



DATA SHEET

WTB4SP-21311220ZZZ

W4
Photoelectric sensors

SICK Sensor Intelligence



Illustration may differ

PHOTOELECTRIC SENSORS

WTB4SP-21311220ZZZ

ORDERING INFORMATION

Type	part no.
WTB4SP-21311220ZZZ	1139075

Further device versions and accessories at www.sick.com/W4

DETAILED TECHNICAL DATA

FEATURES

Functional principle	Photoelectric proximity sensor
Functional principle detail	Background suppression, NarrowBeam
Sensing range	
Sensing range min.	4 mm
Sensing range max.	130 mm
Adjustable switching threshold for background suppression	10 mm ... 130 mm
Reference object	Object with 90% remission factor (complies with standard white according to DIN 5033)
Minimum distance between set sensing range and background (black 6% / white 90%)	0.5 mm, At 70 mm distance
Recommended sensing range for the best performance	20 mm ... 90 mm
Emitted beam	
Light source	PinPoint LED
Type of light	Visible red light
Shape of light spot	Point-shaped
Light spot size (distance)	1.8 mm (70 mm)
Maximum dispersion of the emitted beam around the standardized transmission axis (squint angle)	< +/- 1.5° (at T_U = +23 °C)
Focus position	70 mm
Key LED figures	
Normative reference	EN 62471:2008-09 | IEC 62471:2006, modified
LED risk group marking	Free group
Wave length	635 nm
Average service life	100,000 h at T_a = +25 °C
Smallest detectable object (MDO) typ.	0.1 mm, At 70 mm distance Object with 90% remission factor (complies with standard white according to DIN 5033)
Adjustment	
Teach-Turn adjustment	BluePilot

	For setting the sensing range
Display	
LED blue	BluePilot: sensing range indicator
LED green	Operating indicator Static on: power on
LED yellow	Status of received light beam Static on: object present Static off: object not present
Special applications	Detecting uneven, shiny objects, Detection of poorly remitting and tilted objects

SAFETY-RELATED PARAMETERS

$MTTF_D$	1,404 years
DC_{avg}	0%

ELECTRONICS

Supply voltage U_B	10 V DC ... 30 V DC [1]
Ripple	≤ 5 V_{pp}
Usage category	DC-12 (According to EN 60947-5-2) DC-13 (According to EN 60947-5-2)
Current consumption	≤ 20 mA, without load. At U_B = 24 V
Protection class	III
Digital output	
Number	1
Type	Push-pull: PNP/NPN
Switching mode	Light switching
Signal voltage PNP HIGH/LOW	Approx. U_B-2.5 V / 0 V
Signal voltage NPN HIGH/LOW	Approx. U_B / < 2.5 V
Output current $I_{max.}$	≤ 100 mA
Circuit protection outputs	Reverse polarity protected Overcurrent protected Short-circuit protected
Response time	≤ 500 µs
Repeatability (response time)	150 µs
Switching frequency	1,000 Hz
Pin/Wire assignment	
Function of pin 4/black (BK)	Digital output, light switching, object present → output Q HIGH [2]

[1] Limit values.

[2] This switching output must not be connected to another output.

MECHANICS

Housing	Rectangular
Design detail	Slim
Dimensions (W x H x D)	12.1 mm x 41.9 mm x 18.6 mm
Connection	Connector M8, 3-pin
Material	
Housing	Plastic, VISTAL®
Front screen	Plastic, PMMA
Male connector	Plastic, VISTAL®
Maximum tightening torque of the fixing screws	0.4 Nm

AMBIENT DATA

Enclosure rating	IP66 (EN 60529) IP67 (EN 60529)

Ambient operating temperature	–40 °C ... +60 °C
Ambient temperature, storage	–40 °C ... +75 °C
Typ. Ambient light immunity	Artificial light: ≤ 50,000 lx Sunlight: ≤ 50,000 lx
Shock resistance	30 g, 11 ms (3 positive and 3 negative shocks along X, Y, Z axes, 18 total shocks (EN60068-2-27))
Vibration resistance	10 Hz ... 1,000 Hz (Amplitude 1 mm, 3 x 30 min (EN60068-2-6))
Air humidity	35 % ... 95 %, relative humidity (no condensation)
Electromagnetic compatibility (EMC)	EN 60947-5-2
Resistance to cleaning agent	ECOLAB
UL File No.	NRKH.E181493 & NRKH7.E181493

CERTIFICATES

EU declaration of conformity	✓
UK declaration of conformity	✓
ACMA declaration of conformity	✓
Moroccan declaration of conformity	✓
China RoHS	✓
China Compulsory Product Certification (CCC) exempt	✓
cULus certificate	✓
Photobiological safety (IEC EN 62471)	✓

DISPLAY AND ADJUSTMENT ELEMENTS

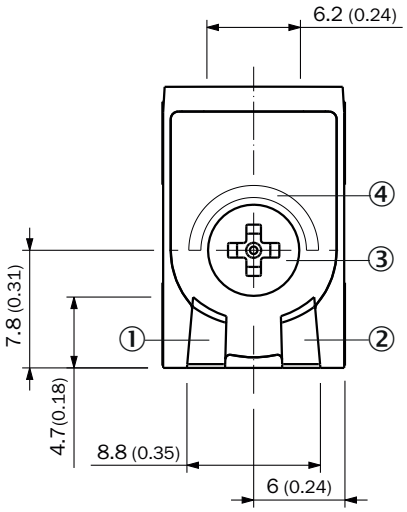

① LED green
② LED yellow
③ Teach-Turn adjustment
④ LED blue

CONNECTION TYPE CONNECTOR M8, 3-PIN

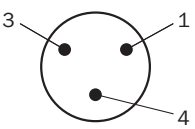

CONNECTION DIAGRAM CD-045

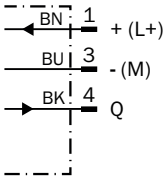

TRUTH TABLE PUSH-PULL: PNP/NPN - LIGHT SWITCHING Q

	Light switching Q (normally open (upper switch), normally closed (lower switch))	
	Object not present ➜ Output LOW	Object present ➜ Output HIGH
Light receive	⊗	✓
Light receive indicator	⊗	☀
Load resistance to L+	⚠	⊗
Load resistance to M	⊗	⚠
	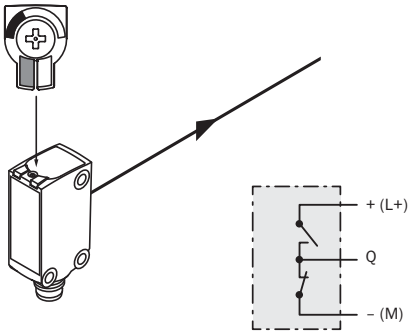	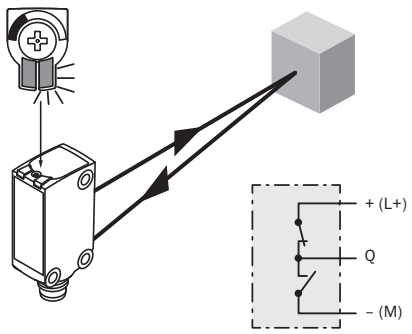

CHARACTERISTIC CURVE

Minimum distance in mm (y) between the set sensing range and white background (90 % remission factor)

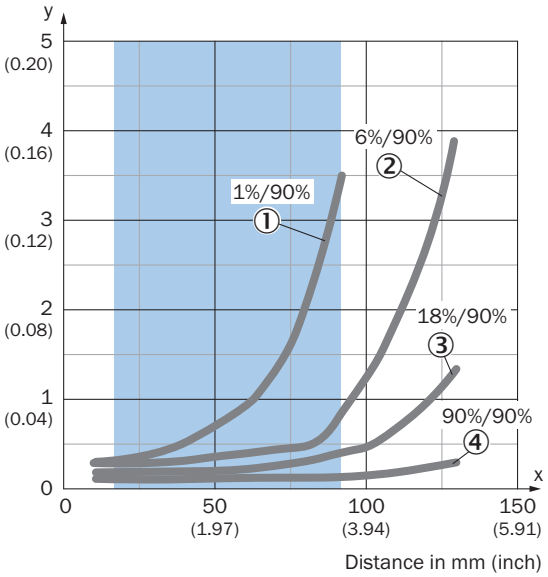

Recommended sensing range for the best performance

① ultra-black object, 1% remission factor
② Black object, 6% remission factor
③ Gray object, 18% remission factor
④ White object, 90% remission factor

Example:
Safe suppression of the background

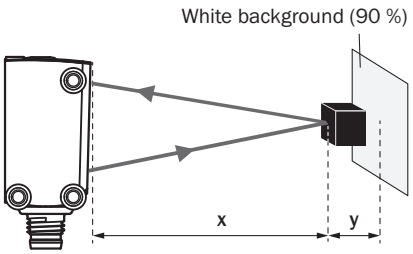

Black object (6 % remission factor)
Set sensing range x = 80 mm
Needed minimum distance to white background y = 0.5 mm

LIGHT SPOT SIZE

Dimensions in mm (inch)

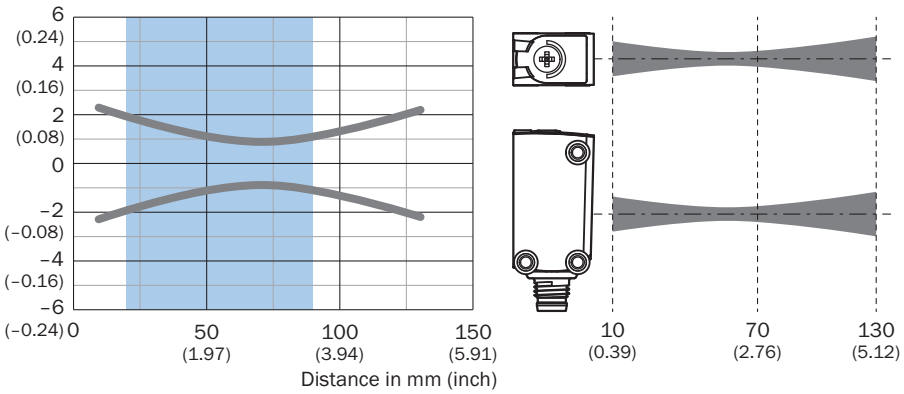

Recommended sensing range for the best performance

SENSING RANGE DIAGRAM

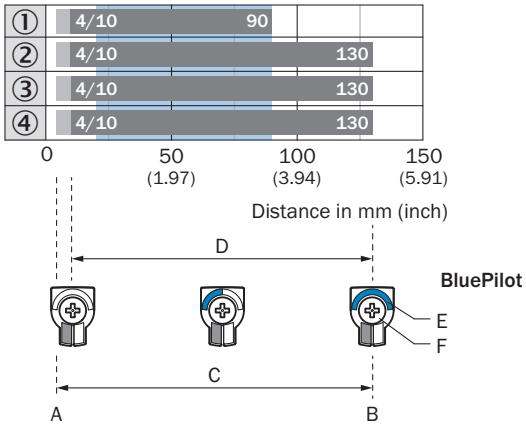

Recommended sensing range for the best performance

1	Ultra-black object, 1% remission factor
2	Black object, 6% remission factor
3	Gray object, 18% remission factor
4	White object, 90% remission factor
A	Sensing range min. in mm
B	Sensing range max. in mm
C	Field of view
D	Adjustable switching threshold for background suppression
E	Sensing range indicator
F	Teach-Turn adjustment

DIMENSIONAL DRAWING, SENSOR

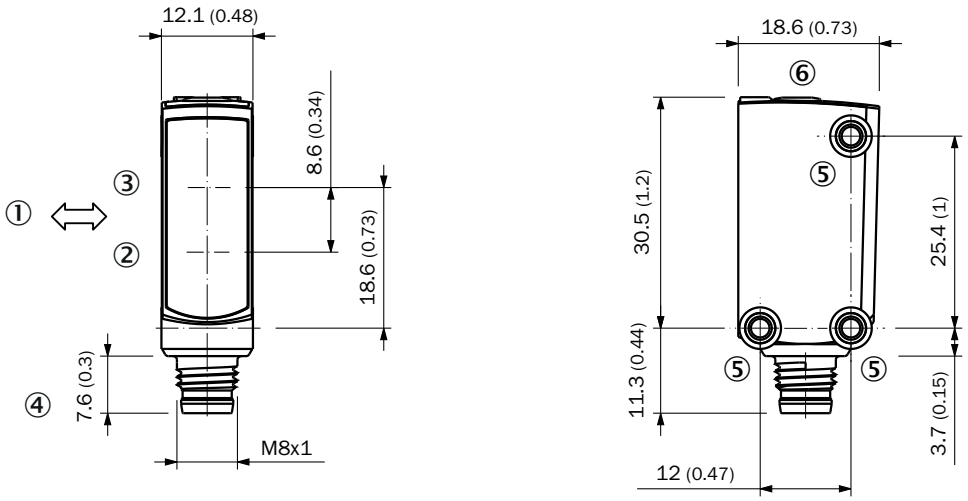

Dimensions in mm (inch)
① Standard direction of the material being detected
② Center of optical axis, receiver
③ Center of optical axis, sender
④ Connection
⑤ M3 mounting hole
⑥ display and adjustment elements

Further information as well as suitable accessories, example applications and downloads such as CAD dimensional models, operating instructions and software can be found at www.sick.com/1139075

SICK AG
WALDKIRCH
GERMANY
SICK.COM

SICK AT A GLANCE

SICK is a leading global technology company for intelligent sensors and integrated solutions in industrial automation. Our technologies set benchmarks, making your industrial processes more efficient, safer and more sustainable – both in logistics and manufacturing operations.

SICK combines sensor intelligence with industry expertise and certified consulting services. We provide the ideal foundation for scalable as well as tailor-made automation solutions and create added value along the entire value chain. Our close partnerships with our customers are more than just a promise: Together, we optimize productivity, improve quality, protect health and safety, and help build a sustainable future. All with empathy and trust.

Since 1946, we have been developing innovative technologies with passion and a pioneering spirit. With a global network in around 40 countries, SICK has a global presence and is always close by. The company's headquarters are located in Waldkirch near Freiburg, Germany. Our customers benefit from our understanding of both local and global requirements, which enables us to deliver tailor-made solutions

SICK

Sensor Intelligence