SICK.COM



DATA SHEET

GTB6L-P4211

G6
Photoelectric sensors

SICK Sensor Intelligence



Illustration may differ

PHOTOELECTRIC SENSORS

GTB6L-P4211

ORDERING INFORMATION

Type	part no.
GTB6L-P4211	1105810

Further device versions and accessories at www.sick.com/G6

DETAILED TECHNICAL DATA

FEATURES

Functional principle	Photoelectric proximity sensor
Functional principle detail	Background suppression
Sensing range	
Sensing range min.	10 mm
Sensing range max.	400 mm
Adjustable switching threshold for background suppression	30 mm ... 400 mm
Reference object	Object with 90% remission factor (complies with standard white according to DIN 5033)
Minimum distance between set sensing range and background (black 6% / white 90%)	3 mm, at a distance of 75 mm
Recommended sensing range for the best performance	30 mm ... 180 mm
Emitted beam	
Light source	Laser
Type of light	Visible red light
Shape of light spot	Point-shaped
Light spot size (distance)	Ø 0.4 mm (150 mm)
Maximum dispersion of the emitted beam around the standardized transmission axis (squint angle)	< +/- 1.5° (at T_U = +23 °C)
Key laser figures	
Normative reference	IEC 60825-1 / CDRH 21 CFR 1040.10 & 1040.11
Laser class	1 [1]
Wave length	680 nm
Pulse duration	2 µs
Maximum pulse power	≤ 11.9 mW
Average service life	100,000 h at T_a = +25 °C
Smallest detectable object (MDO) typ.	0.4 mm, at 150 mm distance (object with 90% remission factor (corresponds to standard white according to DIN 5033))
Adjustment	
Potentiometer	For setting the sensing range, 5 rotations

[1] Do not intentionally look into the laser beam. Never point the laser beam at people's eyes.

Operating mode switch	For inverting the switching function (light/dark switching)
Display	
LED green	Operating indicator Static on: power on
LED yellow	Status of received light beam Static on: object present Static off: object not present

[1] Do not intentionally look into the laser beam. Never point the laser beam at people's eyes.

SAFETY-RELATED PARAMETERS

$MTTF_D$	662 years
DC_{avg}	0 %
T_M (mission time)	10 years

ELECTRONICS

Supply voltage U_B	10 V DC ... 30 V DC [1]
Ripple	< 5 V_{pp}
Usage category	DC-13 (According to EN 60947-5-2)
Current consumption	≤ 20 mA, without load. At U_B = 24 V
Protection class	III
Digital output	
Number	1
Type	PNP
Switching mode	Light/dark switching
Signal voltage PNP HIGH/LOW	Approx. U_B-3 V / 0 V
Output current $I_{max.}$	≤ 100 mA [2]
Circuit protection outputs	Reverse polarity protected Overcurrent protected Short-circuit protected
Response time	≤ 625 µs
Switching frequency	1,000 Hz [3]
Pin/Wire assignment	
Function of pin 4/black (BK)	Digital output, light switching, object present → output Q HIGH
Function of pin 4/black (BK) – detail	The pin 4 function of the sensor can be switched Additional possible settings via operating mode switch

[1] Limit values.

[2] At U_B > 24 V, I max. = 50 mA.

[3] With light/dark ratio 1:1.

MECHANICS

Housing	Rectangular
Dimensions (W x H x D)	12 mm x 31.5 mm x 21 mm
Connection	Male connector M8, 4-pin
Material	
Housing	Plastic, ABS
Front screen	Plastic, PMMA
Cable	Plastic, PVC
Male connector	Metal, copper alloy (C3604 CUZN39PB3)
Weight	Approx. 60 g

AMBIENT DATA

Enclosure rating	IP67 (EN 60529)
Ambient operating temperature	–20 °C ... +50 °C [1) 2)]
Ambient temperature, storage	–40 °C ... +70 °C
Typ. Ambient light immunity	Sunlight: ≤ 13,000 lx
Shock resistance	30 g, 11 ms (3 positive and 3 negative shocks along X, Y, Z axes, 18 total shocks (EN60068-2-27))
Vibration resistance	10 Hz ... 55 Hz (Amplitude 0.5 mm, 3 x 30 min (EN60068-2-6))
Air humidity	35 % ... 95 %, relative humidity (no condensation)
Electromagnetic compatibility (EMC)	EN 60947-5-2
UL File No.	NRKH.E348498 & NRKH7.E348498

[1)] As of T_a => 45 °C, a max. supply voltage U_B = 24 V and a max. load current $I_{max.}$ = 50 mA is permitted.

[2)] Below T_u = –20 °C, a warm-up time of 3 seconds is required.

CERTIFICATES

EU declaration of conformity	✓
UK declaration of conformity	✓
ACMA declaration of conformity	✓
Moroccan declaration of conformity	✓
China RoHS	✓
China Compulsory Product Certification (CCC) exempt	✓
cULus certificate	✓
Laser safety (IEC 60825-1) declaration of manufacturer	✓

DIMENSIONAL DRAWING

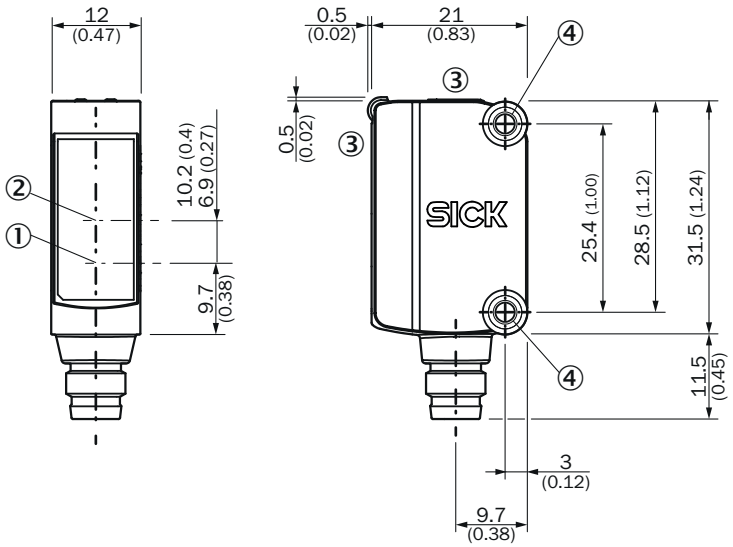

Dimensions in mm (inch)
① Center of optical axis, sender
② Center of optical axis, receiver
③ display and adjustment elements
④ Mounting holes M3

DISPLAY AND ADJUSTMENT ELEMENTS

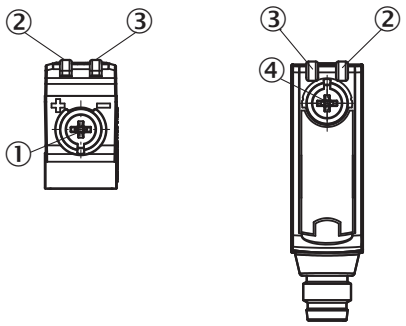

① Potentiometer
② LED yellow
③ LED green
④ operating mode switch

CONNECTION TYPE MALE CONNECTOR M8, 4-PIN

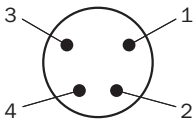

CONNECTION DIAGRAM CD-066

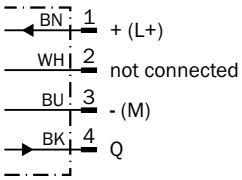

TRUTH TABLE PNP - LIGHT SWITCHING

	Light switching Q (normally open)	
	Object not present ➜ Output LOW	Object present ➜ Output HIGH
Light receive	⊗	✓
Light receive indicator	⊗	☀
Load resistance	⊗	⚠
	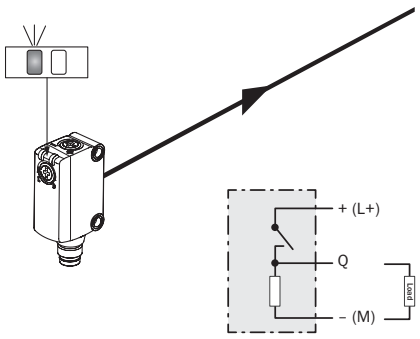	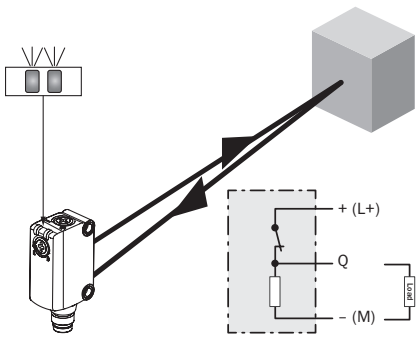

TRUTH TABLE PNP - DARK SWITCHING

	Dark switching $\bar{Q}$ (normally closed)	
	Object not present ➜ Output HIGH	Object present ➜ Output LOW
Light receive	⊗	✓
Light receive indicator	⊗	●
Load resistance	⚠	⊗
	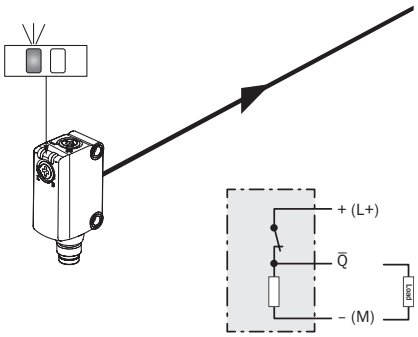	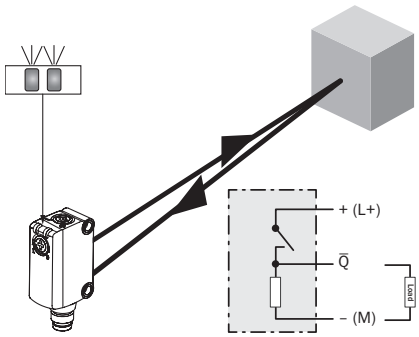

CHARACTERISTIC CURVE

Minimum distance in mm (y) between the set sensing range (x) and white background (90% remission)

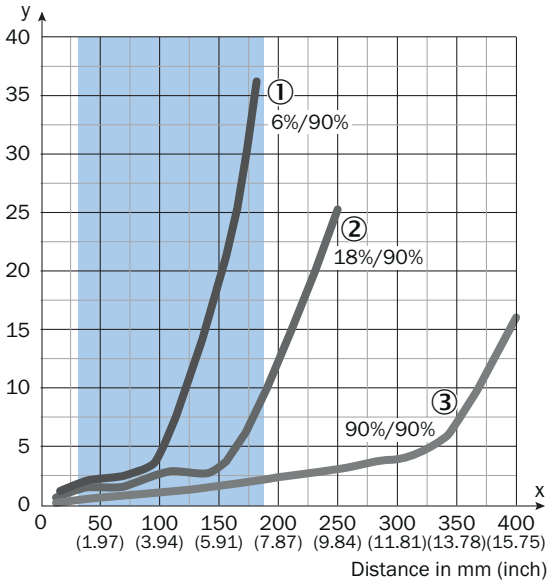

Recommended sensing range for the best performance

① Black object, 6% remission factor
② Gray object, 18% remission factor
③ White object, 90% remission factor

Example:
Safe suppression of the background

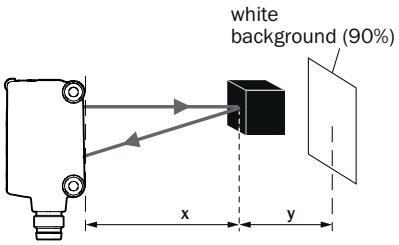

Black object (6% remission)
Set sensing range x = 150 mm. Needed minimum distance to white background y = 20 mm.

LIGHT SPOT SIZE

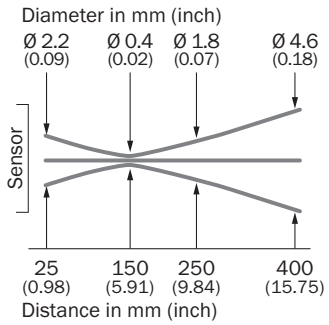

SENSING RANGE DIAGRAM

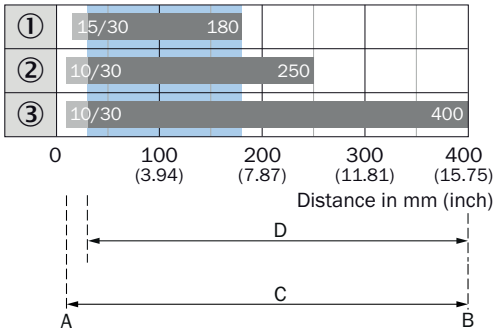

A = Sensing range min. in mm
B = Sensing range max. in mm
C = Viewing range
D = Adjustable switching threshold for background suppression

Recommended sensing range for the best performance

① Black object, 6% remission factor
② Gray object, 18% remission factor
③ White object, 90% remission factor

Further information as well as suitable accessories, example applications and downloads such as CAD dimensional models, operating instructions and software can be found at www.sick.com/1105810

SICK AG
WALDKIRCH
GERMANY
SICK.COM

SICK AT A GLANCE

SICK is a leading global technology company for intelligent sensors and integrated solutions in industrial automation. Our technologies set benchmarks, making your industrial processes more efficient, safer and more sustainable – both in logistics and manufacturing operations.

SICK combines sensor intelligence with industry expertise and certified consulting services. We provide the ideal foundation for scalable as well as tailor-made automation solutions and create added value along the entire value chain. Our close partnerships with our customers are more than just a promise: Together, we optimize productivity, improve quality, protect health and safety, and help build a sustainable future. All with empathy and trust.

Since 1946, we have been developing innovative technologies with passion and a pioneering spirit. With a global network in around 40 countries, SICK has a global presence and is always close by. The company's headquarters are located in Waldkirch near Freiburg, Germany. Our customers benefit from our understanding of both local and global requirements, which enables us to deliver tailor-made solutions

SICK

Sensor Intelligence