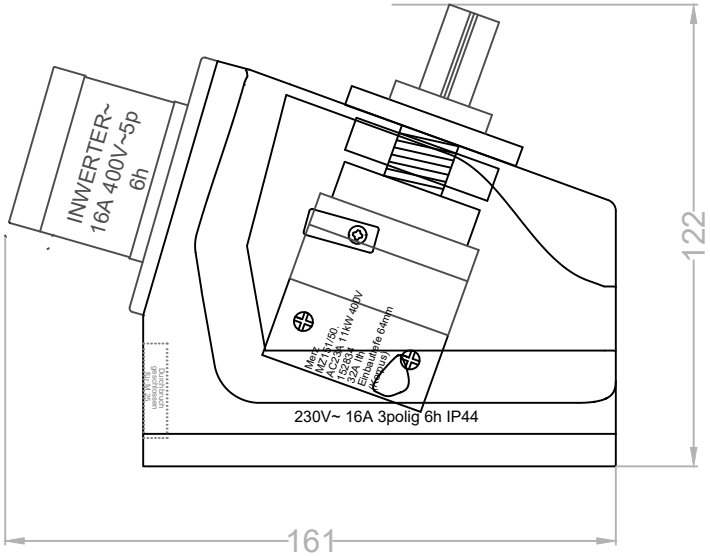

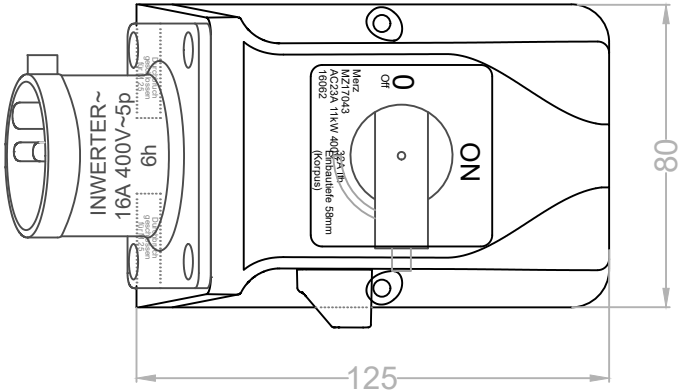

COPY
THIS DOCUMENT IS
OWNED BY PCE GROUP
ANY COPYING OR
DISTRIBUTING WITHOUT
PERMISSION IS ILLEGAL

IP44	Name	Date		Name of product:	Scale	Catalogue number:
Elaborated by:	K.Ożóg	19.05.2026	PCE	WALL MOUNTED PLUG	1:2	615-6WINW
Verified by:	M. Koniarczyk	19.05.2026				
CHANGES Index	Name	Date	Description of changes:	Entry: 16A 5P 400V phase inverter		Number of drawing: 24585
A				Outlet: R.0-1 32A 3P+N +PE connector		
B						