Data sheet

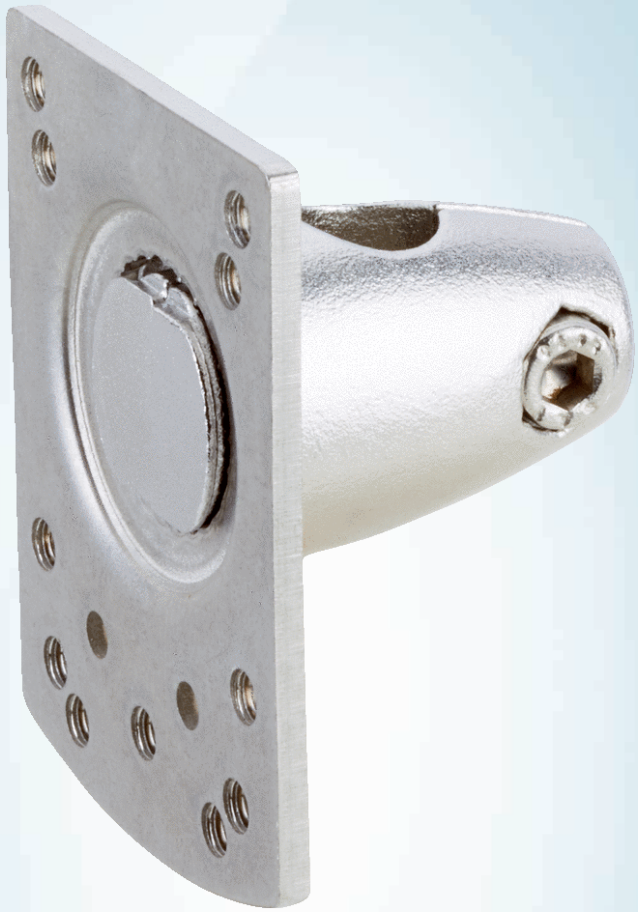

BEF-KHS-N02

Brackets

MOUNTING SYSTEMS

SICK
Sensor Intelligence.

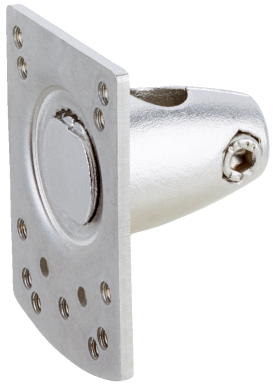

Ordering information

Type	part no.
BEF-KHS-N02	2051608

Included in delivery: BEF-KHS-KH3 (1)

Other models and accessories ➜ www.sick.com/Brackets

Detailed technical data

Features

Accessory group	Mounting systems
Accessory family	Brackets
Description	Plate N02 for universal clamp bracket
Material	Zinc plated steel (sheet), Zinc die cast (clamping bracket)
Items supplied	Universal clamp (5322626), mounting hardware
Usable for	W4S-3 Glass W10 W4SLG-3 W4S-3 Inox W4S-3 Inox Glass W9 W11-2 W12-3 W12-2 Laser W12G W12 Teflon W16 W250 W250-2 PowerProx W11G-2 TranspaTect WTT12 UC12 P250 G6 Inox W4S W4SL-3V W4SLG-3V W4SL-3H
Mounting system type	Mounting plate

Classifications

ECLASS 5.0	27279202
ECLASS 5.1.4	27279202
ECLASS 6.0	27279202
ECLASS 6.2	27279202
ECLASS 7.0	27279202

ECLASS 8.0	27279202
ECLASS 8.1	27279202
ECLASS 9.0	27273701
ECLASS 10.0	27273701
ECLASS 11.0	27273701
ECLASS 12.0	27273701
ETIM 5.0	EC002024
ETIM 6.0	EC002024
ETIM 7.0	EC002024
ETIM 8.0	EC002024
UNSPSC 16.0901	32131023

Dimensional drawing

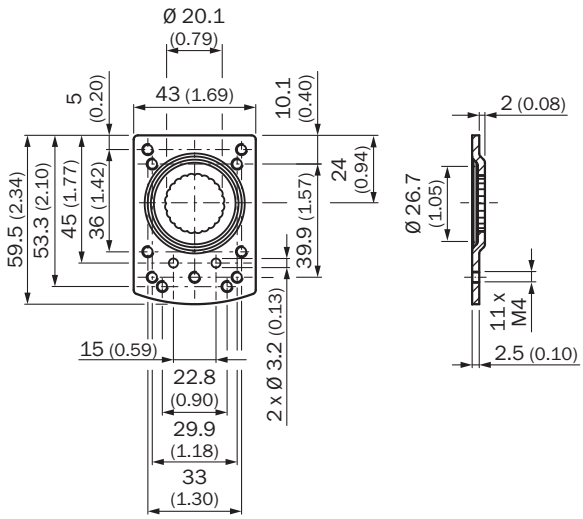

Dimensions in mm (inch)

Dimensional drawing

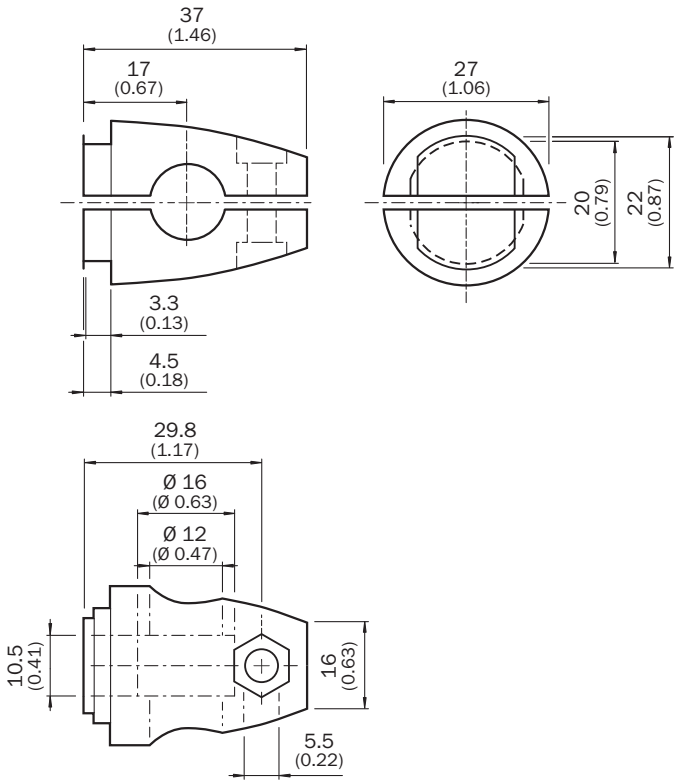

Dimensions in mm (inch)
BEF-KHS-KH3

SICK AT A GLANCE

SICK is one of the leading manufacturers of intelligent sensors and sensor solutions for industrial applications. A unique range of products and services creates the perfect basis for controlling processes securely and efficiently, protecting individuals from accidents and preventing damage to the environment.

We have extensive experience in a wide range of industries and understand their processes and requirements. With intelligent sensors, we can deliver exactly what our customers need. In application centers in Europe, Asia and North America, system solutions are tested and optimized in accordance with customer specifications. All this makes us a reliable supplier and development partner.

Comprehensive services complete our offering: SICK LifeTime Services provide support throughout the machine life cycle and ensure safety and productivity.

For us, that is “Sensor Intelligence.”

WORLDWIDE PRESENCE:

Contacts and other locations –www.sick.com