Data sheet



IME12-04BDSZY2S

IME

INDUCTIVE PROXIMITY SENSORS

SICK
Sensor Intelligence.



Illustration may differ

Ordering information

Type	part no.
IME12-04BDSZY2S	1068255

Included in delivery: BEF-MU-M12 (1)

Other models and accessories → www.sick.com/IME

Detailed technical data

Features

Housing	Metric
Housing	Standard design
Thread size	M12 x 1
Diameter	Ø 12 mm
Sensing range S_n	4 mm
Safe sensing range S_a	3.24 mm
Installation type	Flush
Switching frequency	2,000 Hz
Connection type	Cable, 2-wire, 2 m, Oil-resistant
Output function	NO
Electrical wiring	DC 2-wire
Enclosure rating	IP67 [1]
Items supplied	Mounting nut, brass, nickel-plated (2x)

[1] According to EN 60529.

Mechanics/electronics

Supply voltage	10 V DC ... 30 V DC
Ripple	≤ 10 %
Voltage drop	≤ 4 V [1] ≤ 4.5 V [2]

[1] At I_a = 30 mA.

[2] At I_a max.

[3] Supply voltage U_B and constant ambient temperature Ta.

[4] Of Sr.

Time delay before availability	≤ 100 ms
Hysteresis	5 % ... 15 %
Reproducibility	≤ 2 % [3] [4]
Temperature drift (of S_r)	± 10 %
EMC	According to EN 60947-5-2
Continuous current I_a	≤ 100 mA
Off-state current	≤ 0.8 mA
Minimum load current	≥ 3 mA
Cable material	PVC
Conductor size	0.25 mm²
Cable diameter	Ø 3.9 mm
Short-circuit protection	✓
Power-up pulse	≤ 5 ms
Shock and vibration resistance	30 g, 11 ms/10 Hz ... 55 Hz, 1 mm
Ambient operating temperature	–25 °C ... +75 °C
Housing material	Brass, nickel-plated
Sensing face material	Plastic, PA 66
Housing length	63 mm
Thread length	48 mm
Tightening torque, max.	≤ 12 Nm
UL File No.	NRKH.E181493

[1] At I_a = 30 mA.
[2] At I_a max.
[3] Supply voltage U_B and constant ambient temperature Ta.
[4] Of Sr.

Safety-related parameters

$MTTF_D$	1,103 years
DC_{avg}	0 %
T_M (mission time)	20 years

Reduction factors

Note	The values are reference values which may vary
St37 steel (Fe)	1
Stainless steel (V2A, 304)	Approx. 0.8
Aluminum (Al)	Approx. 0.45
Copper (Cu)	Approx. 0.4
Brass (Br)	Approx. 0.4

Installation note

Remark	Associated graphic see "Installation"
B	24 mm
C	12 mm

D	12 mm
F	32 mm

Classifications

ECLASS 5.0	27270101
ECLASS 5.1.4	27270101
ECLASS 6.0	27270101
ECLASS 6.2	27270101
ECLASS 7.0	27270101
ECLASS 8.0	27270101
ECLASS 8.1	27270101
ECLASS 9.0	27270101
ECLASS 10.0	27270101
ECLASS 11.0	27270101
ECLASS 12.0	27274001
ETIM 5.0	EC002714
ETIM 6.0	EC002714
ETIM 7.0	EC002714
ETIM 8.0	EC002714
UNSPSC 16.0901	39122230

Certificates

EU declaration of conformity	✓
UK declaration of conformity	✓
ACMA declaration of conformity	✓
Moroccan declaration of conformity	✓
China RoHS	✓
cULus certificate	✓

Installation note Flush installation

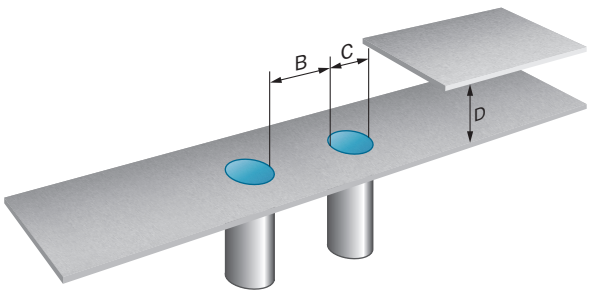

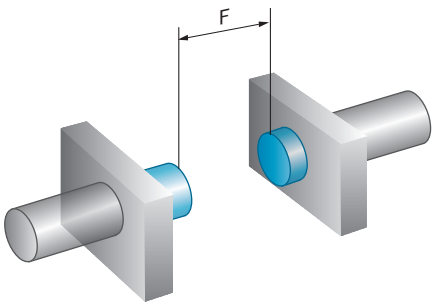

Connection type



Connection diagram Cd-012

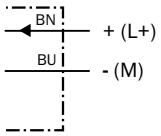

Dimensional drawing IME12 standard, cable, flush

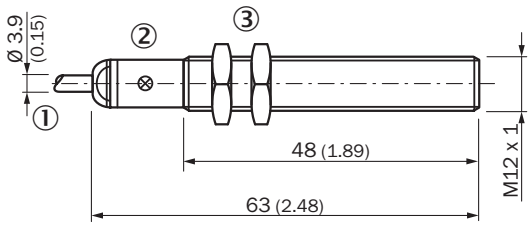

Dimensions in mm (inch)
① Connection
② Display LED
③ Fastening nuts (2x); width across 17, metal

Recommended accessories

Other models and accessories ➜ www.sick.com/IME

	Brief description	Type	part no.
Mounting systems			
	• **Description:** Clamping block for round sensors M12, with fixed stop • **Material:** Plastic • **Details:** Plastic (PA12), glass-fiber reinforced • **Items supplied:** Mounting hardware included	BEF-KHF-M12	2051480
	• **Description:** Mounting plate for M12 sensors • **Material:** Steel • **Details:** Steel, zinc coated • **Items supplied:** Without mounting hardware	BEF-WG-M12	5321869
	• **Description:** Mounting bracket for M12 sensors • **Material:** Steel • **Details:** Steel, zinc coated • **Items supplied:** Without mounting hardware	BEF-WN-M12	5308447
	• **Description:** Clamping block for round sensors M12, without fixed stop • **Material:** Plastic • **Details:** Plastic (PA12), glass-fiber reinforced • **Items supplied:** Mounting hardware included	BEF-KH-M12	2051479

SICK AT A GLANCE

SICK is one of the leading manufacturers of intelligent sensors and sensor solutions for industrial applications. A unique range of products and services creates the perfect basis for controlling processes securely and efficiently, protecting individuals from accidents and preventing damage to the environment.

We have extensive experience in a wide range of industries and understand their processes and requirements. With intelligent sensors, we can deliver exactly what our customers need. In application centers in Europe, Asia and North America, system solutions are tested and optimized in accordance with customer specifications. All this makes us a reliable supplier and development partner.

Comprehensive services complete our offering: SICK LifeTime Services provide support throughout the machine life cycle and ensure safety and productivity.

For us, that is “Sensor Intelligence.”

WORLDWIDE PRESENCE:

Contacts and other locations –www.sick.com