Data sheet



FXL1-SPLMSA00

flexLock

SAFETY LOCKING DEVICES

SICK
Sensor Intelligence.



actuator not supplied with delivery

Ordering information

Type	part no.
FXL1-SPLMSA00	1101323

Other models and accessories ➜ www.sick.com/flexLock

Detailed technical data

Features

Sensor principle	RFID
Locking principle	Power to lock
Coding	Universally coded
Locking force F_{max}	
Flexible actuator	4,100 N (EN ISO 14119)
Rigid actuator (frontal)	3,630 N (EN ISO 14119)
Rigid actuator (lateral)	3,510 N (EN ISO 14119)
Locking force F_{Zh}	
Flexible actuator	3,150 N (EN ISO 14119)
Rigid actuator (frontal)	2,790 N (EN ISO 14119)
Rigid actuator (lateral)	2,700 N (EN ISO 14119)
Actuation force	20 N
Retaining force	30 N
Force against which unlocking is possible	≤ 25 N
Actuation frequency	≤ 1 Hz
Approach speed	≤ 20 m/min

Safety-related parameters

Safety integrity level	SIL 3 (IEC 61508)
Category	Category 4 (EN ISO 13849) [1]

[1] Applies for monitoring of the door position (interlocking monitoring) and locking monitoring.
[2] At 40 °C and 0 m above sea level.

Performance level	PL e (EN ISO 13849) [1]
PFH_D (mean probability of a dangerous failure per hour)	9.55 x 10^{-9} [2]
T_M (mission time)	20 years (EN ISO 13849)
Type	Type 4 (EN ISO 14119)
Actuator coding level	Low coding level (EN ISO 14119)
Safe state in the event of a fault	At least one safety-related semiconductor output (OSSD) is in the OFF state.

[1] Applies for monitoring of the door position (interlocking monitoring) and locking monitoring.
[2] At 40 °C and 0 m above sea level.

Functions

Switching behavior of the OSSDs	Locking monitoring
Switching behavior of the application diagnostic output	Actuator monitoring
Safe series connection	In control cabinet (with diagnostics) With Flexi Loop (with diagnostics) With T-connector (without diagnostics)

Interfaces

Connection type	Plug connector, M12, 8-pin
Coupling nut material	Stainless steel
Display elements	LEDs
Diagnostics indicator	✓
Status display	✓

Electronics

Protection class	III (IEC 61140)
Contamination rating	3 (IEC 60947-1)
Classification according to cULus	Class 2
Usage category	DC-13 (IEC 60947-5-3)
Rated insulation voltage U_i	32 V
Rated impulse withstand voltage U_{imp}	1,500 V
Supply voltage V_S	24 V DC (19.2 V DC ... 28.8 V DC)
Power consumption	
Locking device unlocked	65 mA
Locking device locked	125 mA
Peak current	800 mA, 200 ms
Type of output	Self-monitoring semiconductor outputs (OSSDs)
Safety outputs	2 PNP semiconductors, short-circuit protected, cross-circuit monitored
Output current	
Safety outputs	≤ 100 mA
Application diagnostic outputs	≤ 50 mA
Output voltage	U_V - 2 V DC ... U_V
Response time	≤ 150 ms [1]

[1] In safe series connection: The value increases by 70 ms with each additional switch.

Release time	≤ 350 ms [1)]
Risk time	150 ms [1)]
Switch-on time	3 s
Locking principle	Power to lock

[1)] In safe series connection: The value increases by 70 ms with each additional switch.

Mechanics

Weight	535 g
Material	
Housing	VISTAL®
Ball bracket	Stainless steel
Latch plate of the actuator	Stainless steel
Plug connectors	Stainless steel
Mechanical life	1 x 10^6 switching cycles

Ambient data

Enclosure rating	IP65, IP67, IP69K (IEC 60529, IEC 60529, IEC 20653)
Ambient operating temperature	–20 °C ... +55 °C
Storage temperature	–25 °C ... +70 °C
Relative humidity	10 % ... 95 %, at 40 °C (IEC 60068)
Vibration resistance	10 Hz ... 55 Hz, 1 mm (IEC 60068-2-6)
Shock resistance	30 g, 11 ms (EN 60068-2-27)
EMC	EN IEC 61326-3-1 EN IEC 60947-5-2 EN IEC 60947-5-3 EN 300330

Certificates

EU declaration of conformity	✓
ACMA declaration of conformity	✓
China RoHS	✓
ECOLAB certificate	✓
cULus certificate	✓
EC-Type-Examination approval	✓
Third party certificate	✓

Classifications

ECLASS 5.0	27272603
ECLASS 5.1.4	27272603
ECLASS 6.0	27272603
ECLASS 6.2	27272603
ECLASS 7.0	27272603
ECLASS 8.0	27272603
ECLASS 8.1	27272603
ECLASS 9.0	27272603

ECLASS 10.0	27272603
ECLASS 11.0	27272603
ECLASS 12.0	27272603
ETIM 5.0	EC002593
ETIM 6.0	EC002593
ETIM 7.0	EC002593
ETIM 8.0	EC002593
UNSPSC 16.0901	39122205

Dimensional drawing

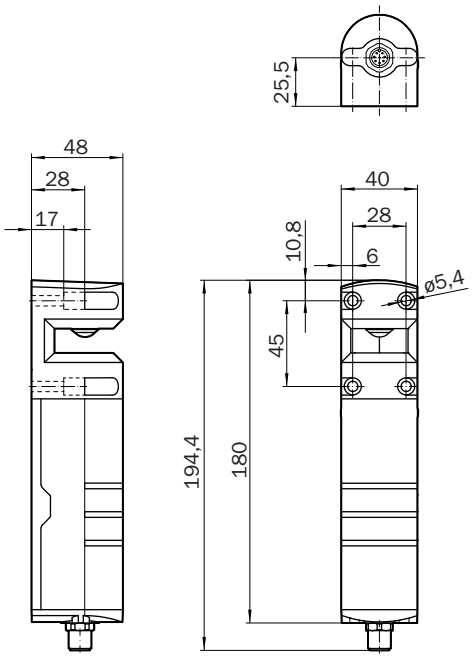

Dimensions in mm (inch)

Series connection with Flexi Loop (with diagnostics)

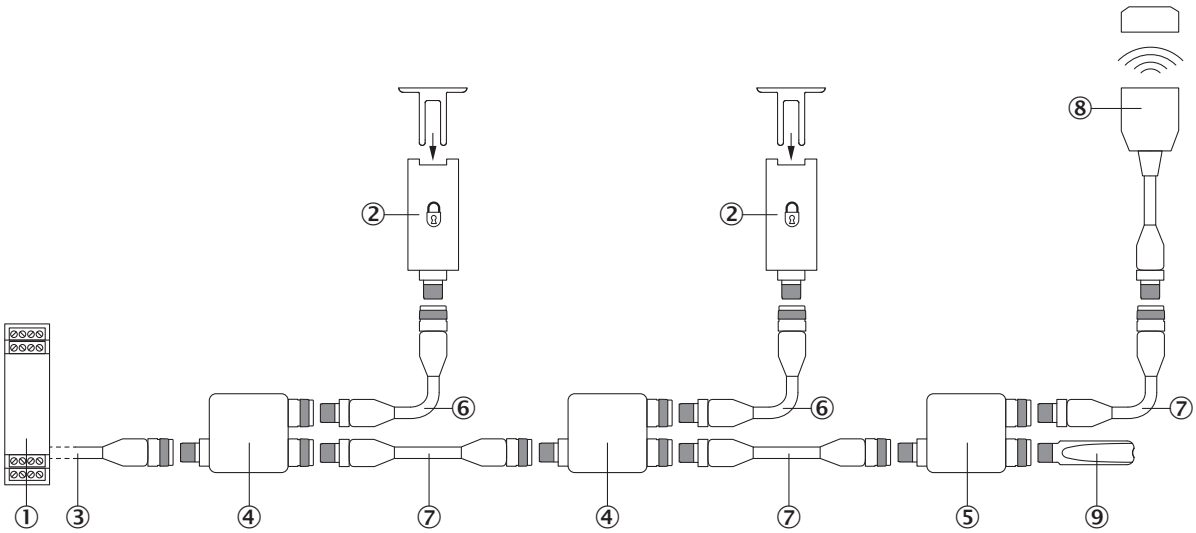

① Flexi Compact safety controller
② flexLock safety locking device
③ connecting cable with M12 female connector, 5-pin and flying leads (e.g., YF2A15-xxxVB5XLEAX)
④ FLN-OSSD1100108 Flexi Loop node
⑤ FLN-OSSD1000105 Flexi Loop node
⑥ Connection cable with 8-pin, M12 male connector and 8-pin, M12 female connector (e.g., YF2A18-xxxUA5M2A18)
⑦ Connection cable with 5-pin, M12 male connector and 5-pin, M12 female connector (e.g., YF2A15-xxxUB5M2A15)
⑧ STR1 RFID safety switch (e.g., STR1-SAxx0AC5)
⑨ FLT-TERM00001 Flexi Loop terminating element

Series connection with T-piece (without diagnostics)

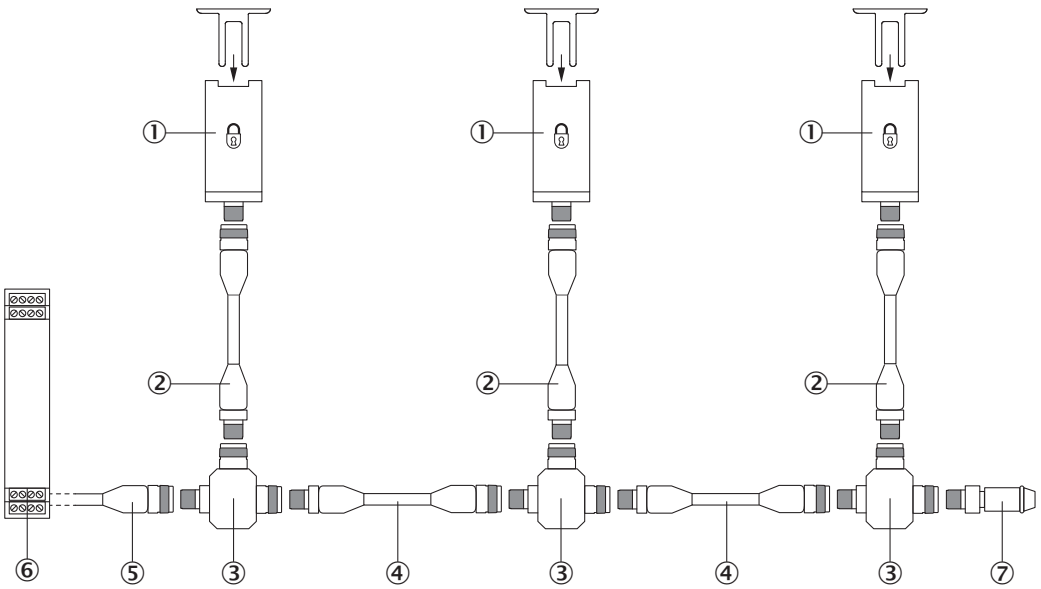

① flexLock safety locking device
② Connection cable with 8-pin, M12 male connector and 8-pin, M12 female connector (e.g., YF2A18-xxxUA5M2A18)
③ T-junctions
④ Connection cable with 5-pin, M12 male connector and 5-pin, M12 female connector (e.g., YF2A15-xxxUB5M2A15)
⑤ connecting cable with M12 female connector, 5-pin and flying leads (e.g., YF2A15-xxxVB5XLEAX)
⑥ Safe evaluation unit

⑦ End plug

Connection diagram flexLock safety locking device to RLY3-OSSD2 safety relay

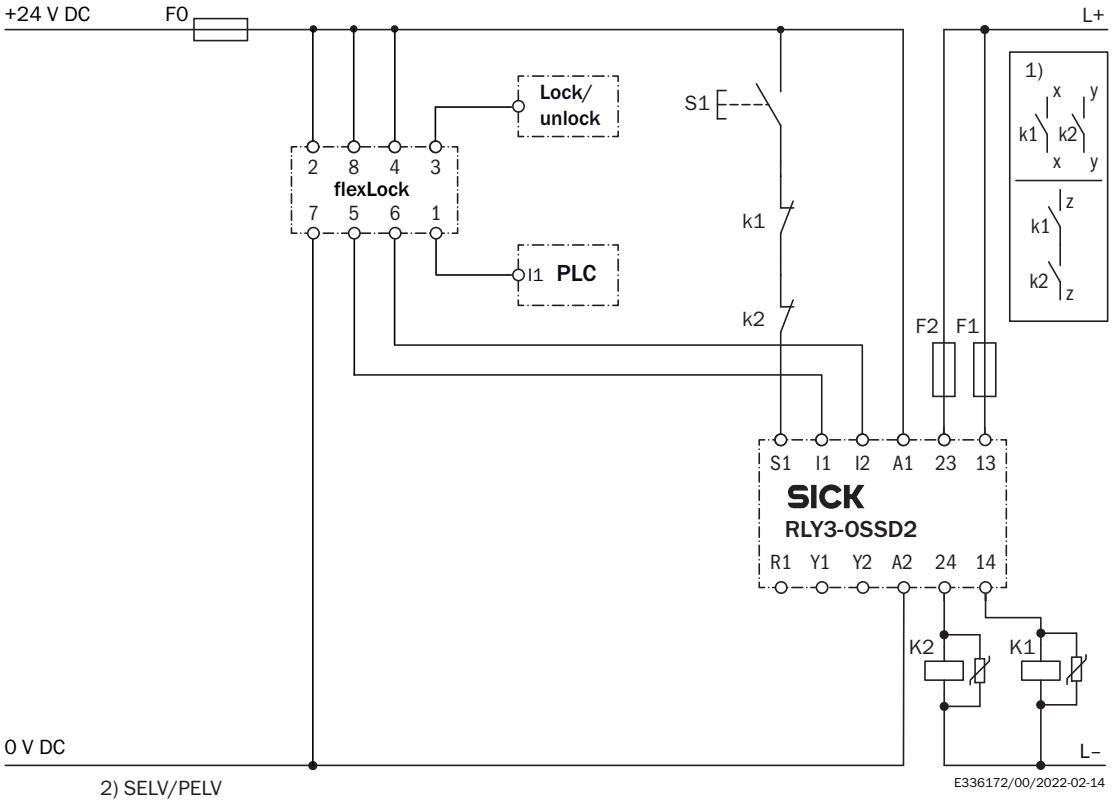

Connection diagram Series connection of three flexLock safety locking devices to RLY3-OSSD2 safety relay

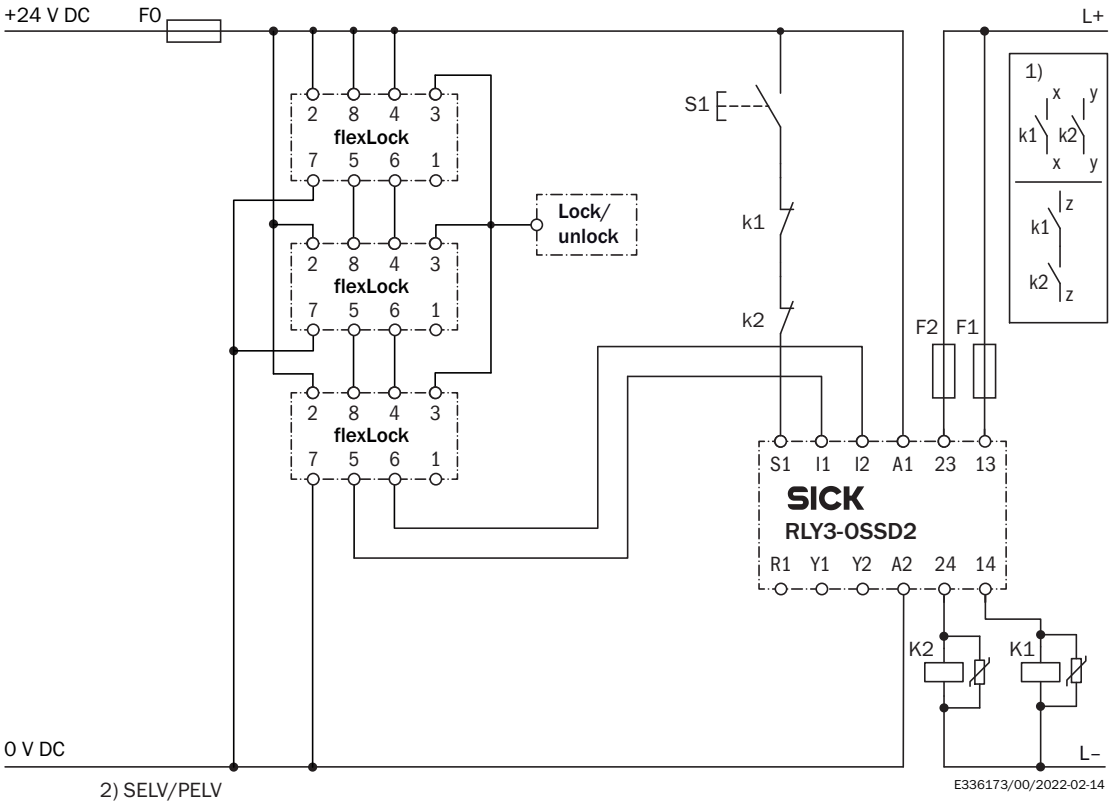

Pinouts

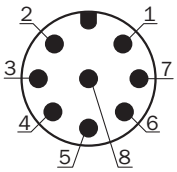

Pin	Designation	Description
1	Out AUX	Application diagnostic output (not safe)
2	+24 V DC	24 V DC voltage supply
3	LOCK	Locking device input
4	In 2	Enable input for OSSD 2*
5	OSSD 1	OSSD 1 output
6	OSSD 2	OSSD 2 output
7	0 V	0 V DC voltage supply
8	In 1	Enable input for OSSD 1*
* When used as an individual safety locking device or as the first safety locking device in a safe series connection, apply 24 V DC.		

Recommended accessories

Other models and accessories ➜ www.sick.com/flexLock

	Brief description	Type	part no.
actuators and bolts			
	• **Catch release button/ANSI-compliant locking mechanism:** yes • **Escape release:** no • **Frame plate with latching function:** no • **Suitable for:** flexLock safety locking device (with actuator FXL-AR1) • **Items supplied:** Frame plate flexLock, adapter for actuator mounting (MB1-BRFL), adapter for actuator mounting (MB1-BRFL), safety screws for installing provided adapters, Mounting instructions • **Description:** Complete set consisting of door bolting unit with frame plate for flexLock and adapters for actuators	MB1-BF10	1111207
	• **Product:** Actuators for RFID safety switches • **Description:** Rigid actuator, can be inserted into the locking device from the front or side	FXL1-AR1	1101327
	• **Product:** Actuators for RFID safety switches • **Description:** Flexible actuator, can be inserted into the locking device from the front	FXL1-AF1	1101326

SICK AT A GLANCE

SICK is one of the leading manufacturers of intelligent sensors and sensor solutions for industrial applications. A unique range of products and services creates the perfect basis for controlling processes securely and efficiently, protecting individuals from accidents and preventing damage to the environment.

We have extensive experience in a wide range of industries and understand their processes and requirements. With intelligent sensors, we can deliver exactly what our customers need. In application centers in Europe, Asia and North America, system solutions are tested and optimized in accordance with customer specifications. All this makes us a reliable supplier and development partner.

Comprehensive services complete our offering: SICK LifeTime Services provide support throughout the machine life cycle and ensure safety and productivity.

For us, that is “Sensor Intelligence.”

WORLDWIDE PRESENCE:

Contacts and other locations –www.sick.com