Data sheet



MPS-064TSNP0

MPS-T

CYLINDER SENSORS

SICK
Sensor Intelligence.



Ordering information

Type	part no.
MPS-064TSNP0	1053836

Other models and accessories ➜ www.sick.com/MPS-T

Detailed technical data

Features

Cylinder type	T-slot
Cylinder types with adapter	Round body cylinder Profile cylinders and tie-rod cylinders Dovetail groove cylinder
Measuring range	64 mm [1]
Housing length	77 mm
Output function	Analog
Electrical wiring	DC 4-wire
Analog output (voltage)	0 V ... 10 V [2]
Analog output (current)	4 mA ... 20 mA [2]
Enclosure rating	IP67 [3]

[1] ± 1 mm.
[2] The sensor only activates the wired output.
[3] According to EN 60529.

Mechanics/electronics

Supply voltage	15 V DC ... 30 V DC
Power consumption	22 mA, without load
Max. load resistance	≤ 500 Ω Power Output, at 24 V
Min. load resistance	≥ 2 kΩ [1]
Protection class	III
Time delay before availability	1.5 s

[1] Voltage output.
[2] FSR: Full Scale Range; max. measuring range.
[3] At 25 ° C, linearity error (maximum deviation) depending on response curve and minimal deviation function.
[4] At 25 ° C, repeatability magnet movement in one direction.
[5] Only in standard mode, not in IO-Link mode.
[6] The analog measured value can deviate for up to 100 ms under transient conditions.

Required magnetic field sensitivity, typ.	4 mT ... 30 mT
Resolution, typ.	0.03 % FSR (max. ≥ 0.05 mm) [2]
Linearity error, typ.	0.3 mm [3]
Repeat accuracy, typ.	0.06 % FSR (≥ 0.1 mm) [4]
Sampling rate, typ.	1 ms [5]
Reverse polarity protection	Yes
Short-circuit protection	Yes
Status indicator LED	Yes
Teach-in	No
Ambient operating temperature	–20 °C ... +70 °C
Shock and vibration resistance	30 g, 11 ms / 10 ... 55 Hz, 1 mm
EMC	According to EN 60947-5-7 [6]
Connection type	Cable with M8 male connector, 4-pin, 0.3 m
Connection type Detail	
Deep-freeze property	Do not bend below 0 °C
Conductor cross section	0.08 mm²
Cable diameter	Ø 2.6 mm
Bending radius	With fixed installation > 5 x cable diameter
	For flexible use > 10 x cable diameter
Cable outlet	Axial
Material	
Housing	Plastic
Cable	PUR
UL File No.	NRKH.E181493 & NRKH7.E181493

[1] Voltage output.
[2] FSR: Full Scale Range; max. measuring range.
[3] At 25 ° C, linearity error (maximum deviation) depending on response curve and minimal deviation function.
[4] At 25 ° C, repeatability magnet movement in one direction.
[5] Only in standard mode, not in IO-Link mode.
[6] The analog measured value can deviate for up to 100 ms under transient conditions.

Safety-related parameters

$MTTF_D$	335 years
DC_{avg}	0 %
T_M (mission time)	20 years

Certificates

EU declaration of conformity	✓
UK declaration of conformity	✓
ACMA declaration of conformity	✓
Moroccan declaration of conformity	✓
China RoHS	✓
cULus certificate	✓

Classifications

ECLASS 5.0	27270104
ECLASS 5.1.4	27270104
ECLASS 6.0	27270104
ECLASS 6.2	27270104
ECLASS 7.0	27270104
ECLASS 8.0	27270104
ECLASS 8.1	27270104
ECLASS 9.0	27270104
ECLASS 10.0	27270104
ECLASS 11.0	27270104
ECLASS 12.0	27274301
ETIM 5.0	EC002544
ETIM 6.0	EC002544
ETIM 7.0	EC002544
ETIM 8.0	EC002544
UNSPSC 16.0901	39122230

Installation note

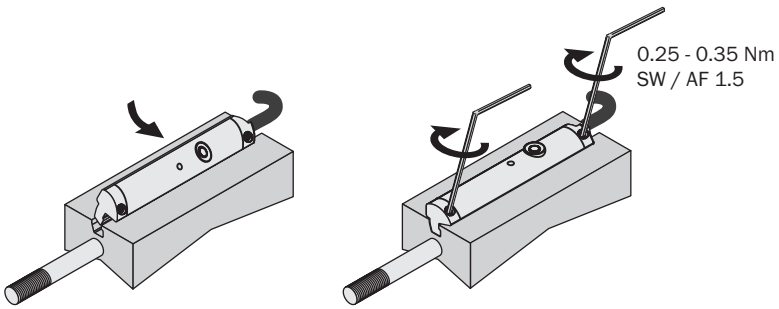

Connection type



Connection diagram Cd-034

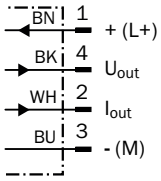

Dimensional drawing Cable with connector M8

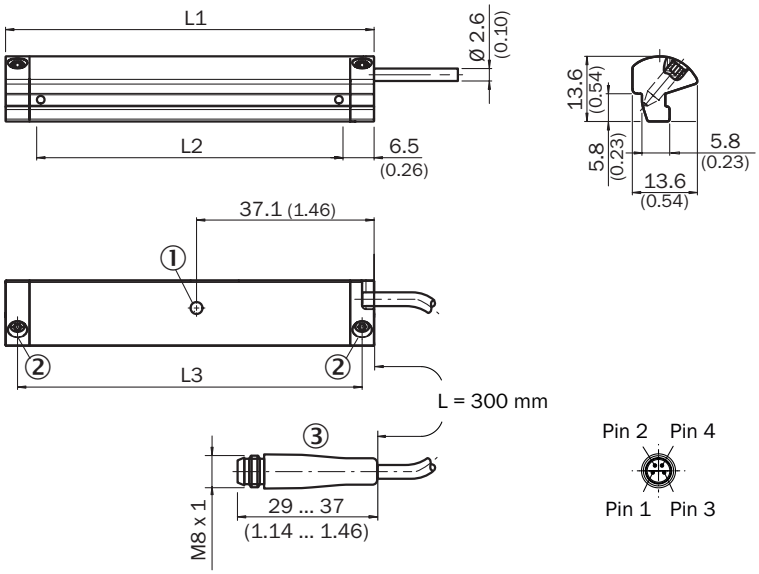

	Total length (L1) mm	Measuring range (L2) mm	Distance mounting screws (L3) mm
MPS-32	45	32	40
MPS-64	77	64	72
MPS-96	109	96	104
MPS-128	141	128	136
MPS-160	173	160	168
MPS-192	205	192	200
MPS-224	237	224	232
MPS-256	269	256	264

Dimensions in mm (inch)
① function indicator
② Fixing screw SW 1.5
③ Connection

Recommended accessories

Other models and accessories ➜ www.sick.com/MPS-T

	Brief description	Type	part no.
Mounting systems			
	• **Description:** Mounting bracket for mounting on SMC rails ECDQ2 (T-slot) • **Material:** Aluminum • **Details:** Aluminum • **Items supplied:** Without mounting hardware	BEF-KHZ-TT1	2046439
	• **Description:** Mounting bracket for mounting on SMC rails CDQ2 (T-slot) • **Material:** Aluminum • **Details:** Aluminum • **Items supplied:** Without mounting hardware	BEF-KHZ-TT2	2046440
	• **Description:** Mounting bracket for cylinder with dovetail slot • **Material:** Aluminum • **Details:** Aluminum • **Items supplied:** Without mounting hardware	BEF-KHZ-ST1	2022703
	• **Description:** Mounting bracket on round body cylinder with piston diameter of 16 mm, ambient temperature min 0 °C max 50 °C • **Dimensions (W x H x L):** 26.6 m • **Material:** Plastic, Aluminum • **Details:** Plastic, Aluminum • **Packing unit:** 1 piece • **Suitable for:** T-slot	BEF-KHZ-RT-16	2077680
	• **Description:** Mounting bracket on round body cylinder with piston diameter of 8 mm ... 130 mm, ambient temperature min –30 °C max 80 °C • **Material:** Stainless steel, Zinc cast • **Details:** Stainless steel, Zinc cast • **Packing unit:** 1 piece • **Suitable for:** T-slot	BEF-KHZ-RT1-130	2077684
	• **Description:** Mounting bracket on round body cylinder with piston diameter of 12 mm, ambient temperature min 0 °C max 50 °C • **Dimensions (W x H x L):** 22.4 m • **Material:** Plastic, Aluminum • **Details:** Plastic, Aluminum • **Packing unit:** 1 piece • **Suitable for:** T-slot	BEF-KHZ-RT-12	2077681
	• **Description:** Mounting bracket on round body cylinder with piston diameter of 8 mm ... 25 mm, ambient temperature min –30 °C max 80 °C • **Material:** Stainless steel, Zinc cast • **Details:** Stainless steel, Zinc cast • **Packing unit:** 1 piece • **Suitable for:** T-slot	BEF-KHZ-RT1-25	2077682
	• **Description:** Mounting bracket on round body cylinder with piston diameter of 8 mm ... 63 mm, ambient temperature min –30 °C max 80 °C • **Material:** Stainless steel, Zinc cast • **Details:** Stainless steel, Zinc cast • **Packing unit:** 1 piece • **Suitable for:** T-slot	BEF-KHZ-RT1-63	2077683
	• **Description:** Mounting bracket on round body cylinder with piston diameter of 20 mm, ambient temperature min 0 °C max 50 °C • **Dimensions (W x H x L):** 30.6 m • **Material:** Plastic, Aluminum • **Details:** Plastic, Aluminum • **Packing unit:** 1 piece • **Suitable for:** T-slot	BEF-KHZ-RT-20	2077679
	• **Description:** Mounting bracket on round body cylinder with piston diameter of 25 mm, ambient temperature min 0 °C max 50 °C • **Dimensions (W x H x L):** 35.7 m • **Material:** Plastic, Aluminum • **Details:** Plastic, Aluminum • **Packing unit:** 1 piece	BEF-KHZ-RT-25	2077678

	Brief description	Type	part no.
	• **Suitable for:** T-slot		
	• **Description:** Mounting bracket on round body cylinder with piston diameter of 32 mm, ambient temperature min 0 °C max 50 °C • **Dimensions (W x H x L):** 42.9 m • **Material:** Plastic, Aluminum • **Details:** Plastic, Aluminum • **Packing unit:** 1 piece • **Suitable for:** T-slot	BEF-KHZ-RT-32	2077677
	• **Description:** Mounting bracket on round body cylinder with piston diameter of 40 mm, ambient temperature min 0 °C max 50 °C • **Dimensions (W x H x L):** 50.9 m • **Material:** Plastic, Aluminum • **Details:** Plastic, Aluminum • **Packing unit:** 1 piece • **Suitable for:** T-slot	BEF-KHZ-RT-40	2077676
	• **Description:** Mounting bracket on round body cylinder with piston diameter of 50 mm, ambient temperature min 0 °C max 50 °C • **Dimensions (W x H x L):** 61.8 m • **Material:** Plastic, Aluminum • **Details:** Plastic, Aluminum • **Packing unit:** 1 piece • **Suitable for:** T-slot	BEF-KHZ-RT-50	2077675
	• **Description:** Mounting bracket on round body cylinder with piston diameter of 63 mm, ambient temperature min 0 °C max 50 °C • **Dimensions (W x H x L):** 73.9 m • **Material:** Plastic, Aluminum • **Details:** Plastic, Aluminum • **Packing unit:** 1 piece • **Suitable for:** T-slot	BEF-KHZ-RT-63	2077674
	• **Description:** Mounting bracket for integrated profile cylinder/tie-rod cylinder • **Material:** Zinc diecast • **Details:** Zinc diecast • **Items supplied:** Mounting hardware included	BEF-KHZ-PT1	2022702
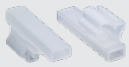	• **Description:** Label Holder, 2.5 mm to 3.5 mm, 10 pcs. • **Material:** Plastic • **Details:** TPU • **Packing unit:** 10 pieces	LABEL HOLDER	2086019
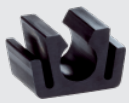	• **Description:** Cable clips T-slot, 10 pcs./bag	CABLE CLIPS	2059322

	Brief description	Type	part no.
connectors and cables			
	• **Connection type head A:** Female connector, M8, 4-pin, straight, A-coded • **Description:** Unshielded • **Connection systems:** Screw-type terminals • **Permitted cross-section:** 0.14 mm² ... 0.5 mm²	DOS-0804-G	6009974
	• **Connection type head A:** Female connector, M8, 4-pin, angled, A-coded • **Description:** Unshielded • **Connection systems:** Solder connection • **Permitted cross-section:** ≤ 0.25 mm²	DOS-0804-W	6009975
	• **Connection type head A:** Male connector, M8, 4-pin, straight, A-coded • **Description:** Unshielded • **Connection systems:** Screw-type terminals • **Permitted cross-section:** 0.14 mm² ... 0.5 mm²	STE-0804-G	6037323
	• **Connection type head A:** Female connector, M8, 4-pin, straight, A-coded • **Connection type head B:** Flying leads • **Signal type:** Sensor/actuator cable • **Cable:** 0.6 m, 4-wire, PUR, halogen-free • **Description:** Sensor/actuator cable, unshielded • **Application:** Uncontaminated zones, Zones with oils and lubricants, Robot, Drag chain operation	YF8U14-C60UA3XLEAX	2145825
	• **Connection type head A:** Female connector, M8, 4-pin, straight, A-coded • **Connection type head B:** Flying leads • **Signal type:** Sensor/actuator cable • **Cable:** 1 m, 4-wire, PUR, halogen-free • **Description:** Sensor/actuator cable, unshielded • **Application:** Uncontaminated zones, Zones with oils and lubricants, Robot, Drag chain operation	YF8U14-010UA3XLEAX	2145826

SICK AT A GLANCE

SICK is one of the leading manufacturers of intelligent sensors and sensor solutions for industrial applications. A unique range of products and services creates the perfect basis for controlling processes securely and efficiently, protecting individuals from accidents and preventing damage to the environment.

We have extensive experience in a wide range of industries and understand their processes and requirements. With intelligent sensors, we can deliver exactly what our customers need. In application centers in Europe, Asia and North America, system solutions are tested and optimized in accordance with customer specifications. All this makes us a reliable supplier and development partner.

Comprehensive services complete our offering: SICK LifeTime Services provide support throughout the machine life cycle and ensure safety and productivity.

For us, that is “Sensor Intelligence.”

WORLDWIDE PRESENCE:

Contacts and other locations –www.sick.com