Data sheet



CSS-WBGAD4115AA10Z

CSS High Resolution

COLOR SENSORS

SICK
Sensor Intelligence.



Illustration may differ

Ordering information

Type	part no.
CSS-WBGAD4115AA10Z	1120174

Other models and accessories ➜ www.sick.com/CSS_High_Resolution

Detailed technical data

Features

Parameter presettings	None
Housing design	Small
Dimensions (W x H x D)	26 mm x 62 mm x 47.5 mm
Light source	LED, RGB [1]
Light emission	Long side of housing
Light spot size	Ø 8 mm ... 32 mm [2]
Light spot direction	Round, large
Wave length	450 nm, 550 nm, 610 nm
LED risk group marking	2
Color mode	C (Color) C + I (Color + Illumination)
Sensing distance	50 mm ... 500 mm
Teach-in mode	Single value teach-in Multi value teach-in
Output mode	2 colors in standard mode/best fit mode 3 colors in coded mode
Output (channel)	2 × hardware switching outputs 24 x virtual switching outputs via IO-Link
Adjustment of the sensitivity	Continuous: 0 ... 999

[1] Average service life: 100,000 h at T_U = +25 °C.

[2] Depends on the sensing distance.

Available job banks	4
Safety-related parameters	
$MTTF_D$	179.9 years

[1] Average service life: 100,000 h at T_U = +25 °C.

[2] Depends on the sensing distance.

Interfaces

IO-Link	✓ , IO-Link V1.1.2
VendorID	26
DeviceID HEX	80028E
DeviceID DEC	8389262
Process data structure	Byte 0 ... 3 = switching output and status Byte 4 ... 11 = measured color values and color adjustment values
Digital output	Q_1, Q_2
Number	2
Digital input	In_1, In_2
Number	2

Electronics

Supply voltage	10.8 V DC ... 28.8 V DC [1]
Ripple	≤ 5 V_{pp} [2]
Current consumption	< 150 mA [3]
Switching frequency	4 kHz
Response time	
	120 µs
Jitter	60 µs
Switching output	Push-pull: PNP/NPN
Switching output (voltage)	Push-pull: PNP/NPN HIGH = U_V - 3 V/LOW ≤ 3 V
Output current $I_{max.}$	100 mA [4]
Input, teach-in (ET)	Teach: U = 10 V ... < V_S
Input, blanking input (AT)	Blanked: U = 10 V ... < Uv
Retention time (ET)	3 s, non-volatile memory
Time delay	None
Protection class	III
Circuit protection	U_V connections, reverse polarity protected Output Q short-circuit protected Interference pulse suppression
Connection type	
	Plug, M12, 5-pin

[1] Limit values: DC 12 V (–10 %) ... DC 24 V (+20 %). Operation in short-circuit protected network max. 8 A.

[2] May not fall below or exceed U_V tolerances.

[3] Without load.

[4] Total current of all Outputs.

Mechanics

Housing material	VISTAL®
Optics material	Glass
Weight	70 g

Ambient data

Ambient operating temperature	–20 °C ... +55 °C
Ambient temperature, storage	–25 °C ... +75 °C
Shock load	According to IEC 60068-2-27 (30 g/11 ms)
Enclosure rating	IP67
UL File No.	E181493

Connection type/pinouts

Connection type	
	Plug, M12, 5-pin
Pinouts	
BN 1	+ (L+)
WH 2	Q_{L2}/IN_1
BU 3	- (M)
BK 4	Q_{L1}/C
GY 5	In_2

Classifications

ECLASS 5.0	27270907
ECLASS 5.1.4	27270907
ECLASS 6.0	27270907
ECLASS 6.2	27270907
ECLASS 7.0	27270907
ECLASS 8.0	27270907
ECLASS 8.1	27270907
ECLASS 9.0	27270907
ECLASS 10.0	27270907
ECLASS 11.0	27270907
ECLASS 12.0	27270907
ETIM 5.0	EC001817
ETIM 6.0	EC001817
ETIM 7.0	EC001817
ETIM 8.0	EC001817
UNSPSC 16.0901	39121528

Certificates

EU declaration of conformity	✓
UK declaration of conformity	✓
ACMA declaration of conformity	✓

Moroccan declaration of conformity	✓
China RoHS	✓
cULus certificate	✓
IO-Link certificate	✓
Photobiological safety (IEC EN 62471)	✓
Information according to Art. 3 of Data Act (Regulation EU 2023/2854)	✓

Dimensional drawing, sensor

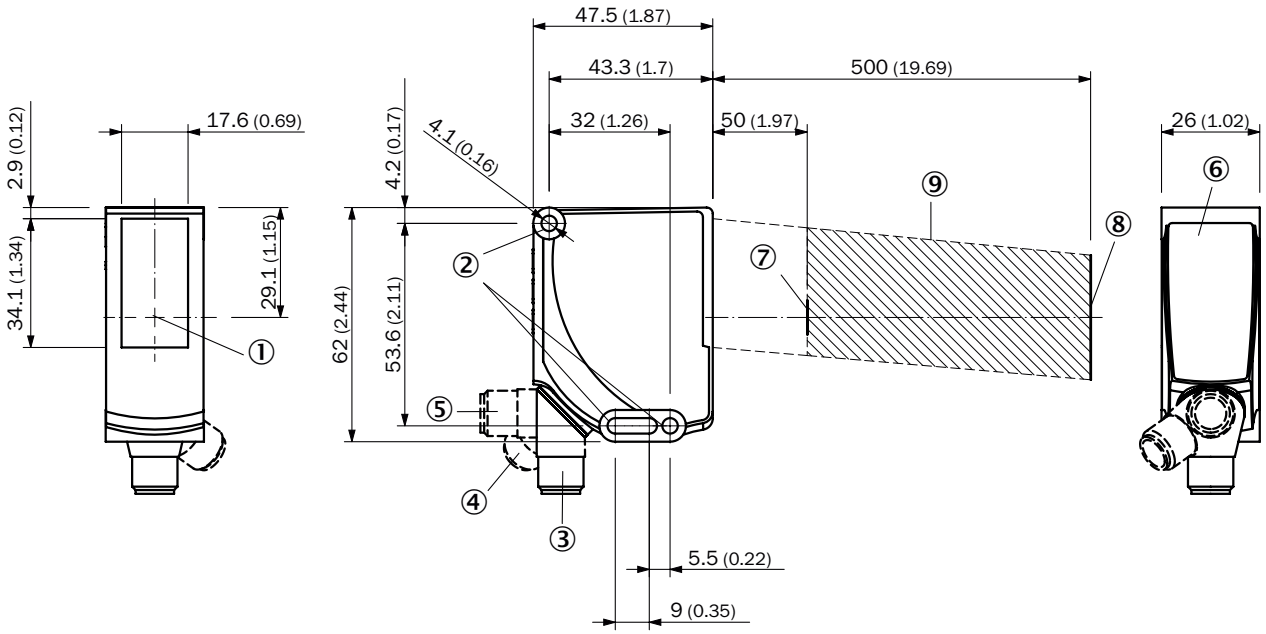

Dimensions in mm (inch)
① Optical axis
② fixing hole
③ M12 male connector, delivery state
④ M12 male connector, end stop right
⑤ M12 male connector, end stop left
⑥ display and adjustment elements
⑦ Light spot size (distance): Ø 8.8 mm (50 mm)
⑧ Light spot size (distance): Ø 32 mm (500 mm)
⑨ working range

Pinouts, see table Technical data: Connection type/pinouts

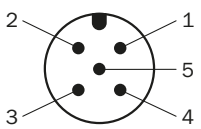

Male connector, M12, 5-pin, A-coded

display and adjustment elements

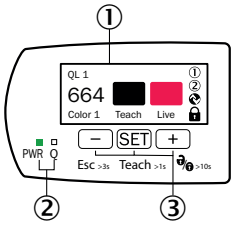

① TFT display
② LEDs (status display)
③ Plus/minus button

Light spot size

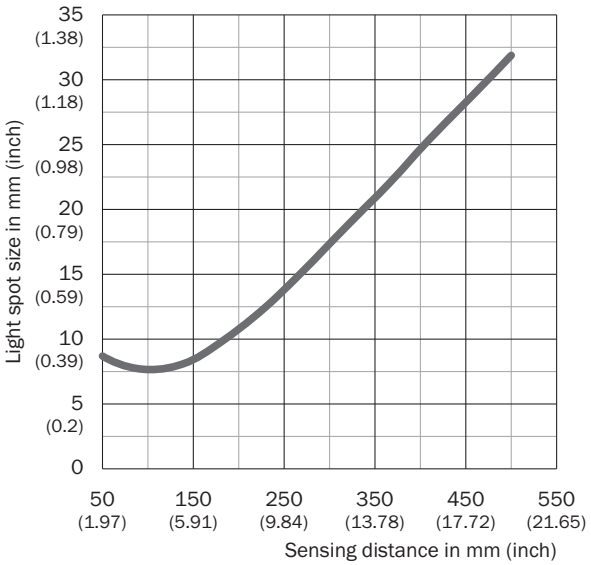

Recommended accessories

Other models and accessories ➜ www.sick.com/CSS_High_Resolution

	Brief description	Type	part no.
Mounting systems			
	• **Description:** Plate K for universal clamp bracket • **Material:** Steel • **Details:** Steel, zinc coated • **Items supplied:** Universal clamp (2022726), mounting hardware • **Usable for:** W11-2, W12-3, W14-2, W18-3, W23-2, W24-2, W27-3, W30, W32, W34, W36, PL50A, PL80A, P250, UC12, LUT3, KT2, KT5-2, KT8, CS8, DT2, DS30, DS40, W12-2 Laser, W16, W26, KT5	BEF-KHS-K01	2022718

	Brief description	Type	part no.
network devices			
		IOLA2US-01101 (SiLink2 Master)	1061790
		SIG350-0004AP100	6076871
		SIG350-0005AP100	6076923
		SIG350-0006AP100	6076924
connectors and cables			
	• **Connection type head A:** Male connector, M12, 5-pin, straight, A-coded • **Description:** Unshielded • **Connection systems:** Screw-type terminals • **Permitted cross-section:** ≤ 0.75 mm² • **Note:** For field bus technology	STE-1205-G	6022083
	• **Connection type head A:** Female connector, M12, 5-pin, straight, A-coded • **Connection type head B:** Flying leads • **Signal type:** Sensor/actuator cable • **Cable:** 5 m, 5-wire, PVC • **Description:** Sensor/actuator cable, unshielded • **Application:** Zones with chemicals, Uncontaminated zones	YF2A15-050VB5XLEAX	2096240

SICK AT A GLANCE

SICK is one of the leading manufacturers of intelligent sensors and sensor solutions for industrial applications. A unique range of products and services creates the perfect basis for controlling processes securely and efficiently, protecting individuals from accidents and preventing damage to the environment.

We have extensive experience in a wide range of industries and understand their processes and requirements. With intelligent sensors, we can deliver exactly what our customers need. In application centers in Europe, Asia and North America, system solutions are tested and optimized in accordance with customer specifications. All this makes us a reliable supplier and development partner.

Comprehensive services complete our offering: SICK LifeTime Services provide support throughout the machine life cycle and ensure safety and productivity.

For us, that is “Sensor Intelligence.”

WORLDWIDE PRESENCE:

Contacts and other locations –www.sick.com