Data sheet



IMM05-1B5P0VU2S

IMM

INDUCTIVE PROXIMITY SENSORS

SICK
Sensor Intelligence.



Illustration may differ

Ordering information

Type	part no.
IMM05-1B5P0VU2S	1111254

Other models and accessories ➜ www.sick.com/IMM

Detailed technical data

Features

Housing	Metric
Housing	Standard design
Thread size	M5 x 0.5
Diameter	Ø 5 mm
Sensing range S_n	1.5 mm
Safe sensing range S_a	1.215 mm
Installation type	Flush
Switching frequency	4,800 Hz
Connection type	Cable, 3-wire, 2 m
Switching output	PNP
Switching output detail	PNP
Output function	NC
Electrical wiring	DC 3-wire
Enclosure rating	IP67 [1]
Special features	Visual adjustment indicator
Items supplied	Mounting nut, V2A stainless steel (2x) Washer, V2A stainless steel, with locking teeth (2x) Cable flag, Polymatic 50 (1 x)

[1] According to EN 60529.

Mechanics/electronics

Supply voltage	10 V DC ... 30 V DC
Ripple	≤ 20 % [1]

[1] Of V_S.
[2] With Ia = 200 mA.
[3] Supply voltage U_B and constant ambient temperature Ta.

Voltage drop	≤ 2 V [2]
Time delay before availability	≤ 10 ms
Hysteresis	1 % ... 15 %
Reproducibility	≤ 2.5 % [3]
Temperature drift (of S_r)	≤ 10 %
EMC	EN 60947-5-2
Continuous current I_a	≤ 200 mA
Cable material	PUR
Conductor size	0.14 mm²
Cable diameter	Ø 2.9 mm
Short-circuit protection	✓
Power-up pulse protection	✓
Shock and vibration resistance	30 g, 11 ms / 10 ... 55 Hz, 1 mm
Ambient operating temperature	–25 °C ... +70 °C
Housing material	Stainless steel V2A, DIN 1.4305 / AISI 303
Sensing face material	Plastic, LCP
Housing length	25 mm
Thread length	23 mm
Tightening torque, max.	≤ 1.5 Nm
UL File No.	NRKH.E348498

[1] Of V_S.
[2] With Ia = 200 mA.
[3] Supply voltage U_B and constant ambient temperature Ta.

Safety-related parameters

$MTTF_D$	1,350 years
DC_{avg}	0 %
T_M (mission time)	20 years

Reduction factors

Note	The values are reference values which may vary
St37 steel (Fe)	1
Stainless steel (V2A, 304)	Approx. 0.76
Aluminum (Al)	Approx. 0.47
Copper (Cu)	Approx. 0.4
Brass (Br)	Approx. 0.54

Installation note

Remark	Associated graphic see "Installation"
B	3 mm
C	5 mm
D	4.5 mm
F	8.5 mm

Certificates

EU declaration of conformity	✓
UK declaration of conformity	✓
ACMA declaration of conformity	✓
Moroccan declaration of conformity	✓
IO-Link certificate	✓

Classifications

ECLASS 5.0	27270101
ECLASS 5.1.4	27270101
ECLASS 6.0	27270101
ECLASS 6.2	27270101
ECLASS 7.0	27270101
ECLASS 8.0	27270101
ECLASS 8.1	27270101
ECLASS 9.0	27270101
ECLASS 10.0	27270101
ECLASS 11.0	27270101
ECLASS 12.0	27274001
ETIM 5.0	EC002714
ETIM 6.0	EC002714
ETIM 7.0	EC002714
ETIM 8.0	EC002714
UNSPSC 16.0901	39122230

Installation note Mounting using BEF-KH-M05 bracket

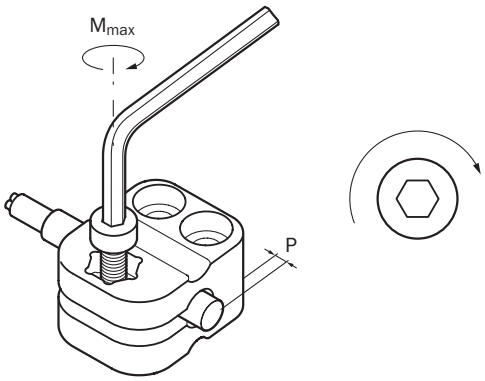

Sensor type	Mounting adapter	Overrun (P)	Max. tightening torque (M_{max})
IMM05-0B8****** IMM05-1B5******	BEF-KH-M05, part no. 2101066	≥ 0 mm	≤ 0.6 Nm

Installation note Fixing with setscrew

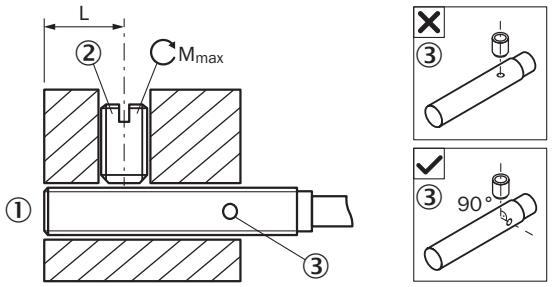

① Sensing face
② Recommended setscrew: M3, flat point
③ Display LED

Sensor type	Mounting area (L)	Max. tightening torque (M_{max})
IMM05-1B5*****K	5.5 mm ... 9 mm	≤ 0.2 Nm
IMM05-0B8*****S IMM05-1B5*****S	5.5 mm ... 19 mm	≤ 0.2 Nm
IMM05-0B8***T0S IMM05-1B5***T0S	5.5 mm ... 18 mm	≤ 0.2 Nm

Installation note Flush installation

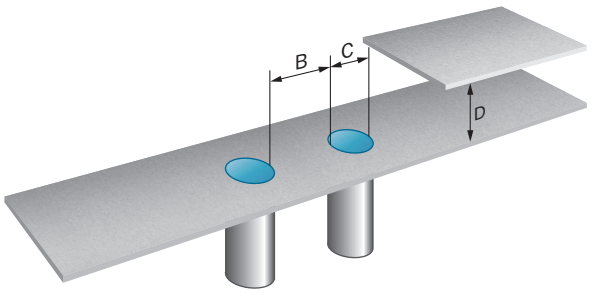

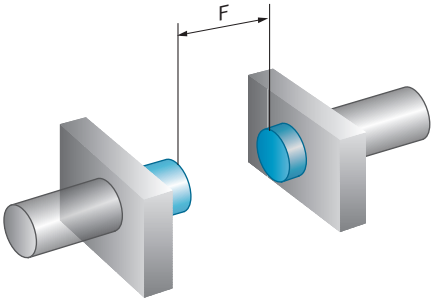

Connection diagram Cd-003

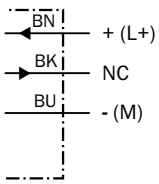

Response diagram

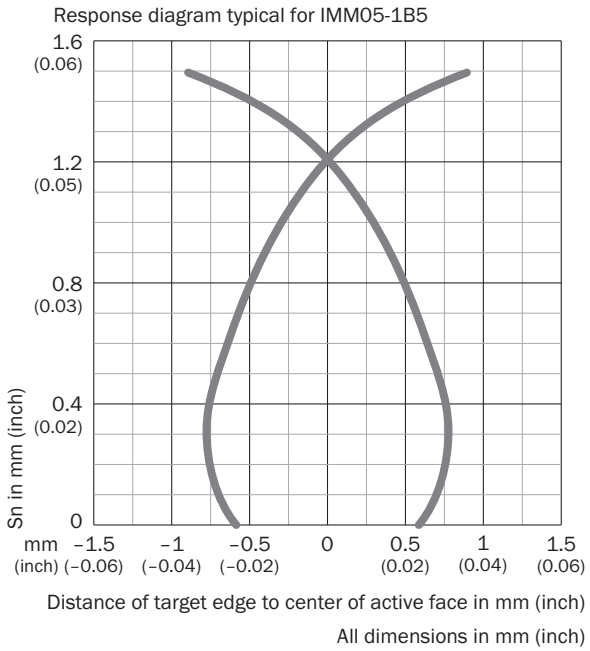

Functional principle Installation aid

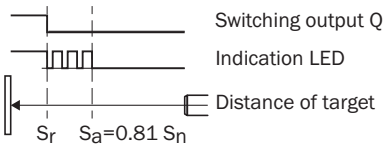

Dimensional drawing IMM05, standard variant, flush, cable

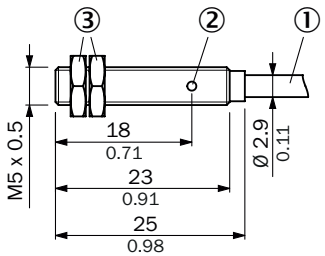

Dimensions in mm (inch)
① Connection
② function indicator
③ fastening nuts (2 x); 8 mm hex, stainless steel

Recommended accessories

Other models and accessories ➜ www.sick.com/IMM

	Brief description	Type	part no.
Mounting systems			
	• **Material:** Plastic • **Details:** Plastic (PA6) • **Items supplied:** Without mounting hardware • **Usable for:** Round sensors with 5 mm housing diameter without fixed stop	BEF-KH-M05	2101066
connectors and cables			
	• **Number of slots:** 4 • **Slot connection type:** M8, 3-pin, A-coded, female connector • **Items supplied:** 5 x labeling plates • **Description:** Unshielded	Y8A34A2-C2A8000XXX	2115733
	• **Number of slots:** 4 • **Slot connection type:** M8, 3-pin, A-coded, female connector • **Items supplied:** 5 x labeling plates • **Cable:** 5 m, 6-wire, PUR, halogen-free • **Description:** Unshielded • **Application:** Drag chain operation	Y8A34A2-LXXXUAA050	2115727
	• **Number of slots:** 6 • **Slot connection type:** M8, 3-pin, A-coded, female connector • **Items supplied:** 5 x labeling plates • **Description:** Unshielded	Y8A36A2-C2A8000XXX	2115734
	• **Number of slots:** 6 • **Slot connection type:** M8, 3-pin, A-coded, female connector • **Items supplied:** 5 x labeling plates • **Cable:** 5 m, 8-wire, PUR, halogen-free • **Description:** Unshielded • **Application:** Drag chain operation	Y8A36A2-LXXXUBA050	2115728
	• **Connection type head A:** Male connector, M8, 3-pin, straight, A-coded • **Description:** Unshielded • **Connection systems:** Screw-type terminals • **Permitted cross-section:** 0.14 mm² ... 0.5 mm²	STE-0803-G	6037322
	• **Connection type head A:** Male connector, M8, 3-pin, angled, A-coded • **Description:** Unshielded • **Connection systems:** Screw-type terminals • **Permitted cross-section:** 0.14 mm² ... 0.5 mm²	STE-0803-WSK	6053170

SICK AT A GLANCE

SICK is one of the leading manufacturers of intelligent sensors and sensor solutions for industrial applications. A unique range of products and services creates the perfect basis for controlling processes securely and efficiently, protecting individuals from accidents and preventing damage to the environment.

We have extensive experience in a wide range of industries and understand their processes and requirements. With intelligent sensors, we can deliver exactly what our customers need. In application centers in Europe, Asia and North America, system solutions are tested and optimized in accordance with customer specifications. All this makes us a reliable supplier and development partner.

Comprehensive services complete our offering: SICK LifeTime Services provide support throughout the machine life cycle and ensure safety and productivity.

For us, that is “Sensor Intelligence.”

WORLDWIDE PRESENCE:

Contacts and other locations –www.sick.com