Data sheet



VTE18-4P4240V

V18

PHOTOELECTRIC SENSORS

SICK
Sensor Intelligence.



Illustration may differ

Ordering information

Type	part no.
VTE18-4P4240V	6035489

Other models and accessories ➜ www.sick.com/V18

Detailed technical data

Features

Functional principle	Photoelectric proximity sensor
Functional principle detail	Energetic
Dimensions (W x H x D)	18 mm x 18 mm x 83 mm
Housing design (light emission)	Cylindrical
Housing length	83 mm
Thread diameter (housing)	M18 x 1
Optical axis	Axial
Sensing range max.	0 mm ... 450 mm [1]
Sensing range	5 mm ... 400 mm
Focus	Approx. 4.5°
Type of light	Infrared light
Light source	LED [2]
Light spot size (distance)	Ø 60 mm (400 mm)
Angle of dispersion	Approx. 4.5°
Wave length	880 nm
Adjustment	Single teach-in button (Sensing range) Manual, via Touch-Teach-in
Special applications	Hygienic and washdown zones

[1] Object with 90% remission (based on standard white, DIN 5033).
[2] Average service life: 100,000 h at T_U = +25 °C.

Mechanics/electronics

Supply voltage U_B	10 V DC ... 30 V DC [1]
Ripple	± 10 % [2]
Current consumption	35 mA [3]
Switching output	PNP [4]
Switching mode	Light/dark switching [4]
Switching mode selector	Selectable via L/D control cable
Signal voltage PNP HIGH/LOW	Approx. VS – 2.0 V / 0 V
Output current $I_{max.}$	≤ 100 mA
Response time	≤ 1 ms [5]
Switching frequency	500 Hz [6]
Connection type	Male connector M12, 4-pin [7]
Circuit protection	A [8] B [9] C [10] D [11]
Protection class	III
Weight	120 g
Housing material	Metal, Stainless steel V4A (1.4404, 316L)
Optics material	Plastic, Plan, PPS (Grilamid)
Enclosure rating	IP67 IP68 IP69K [12]
Ambient operating temperature	–25 °C ... +80 °C [13]
Ambient temperature, storage	–40 °C ... +80 °C
UL File No.	FDA, UL No. NRKH.E181493 & cUL No. NRKH7.E181493

[1] Limit values.
[2] May not fall below or exceed U_V tolerances.
[3] Without load, at VS 30 V DC.
[4] Control wire open: dark switching D.ON.
[5] Signal transit time with resistive load.
[6] With light/dark ratio 1:1.
[7] With gold plated contact pins, PPS with FDA certificate.
[8] A = V_S connections reverse-polarity protected.
[9] B = interference suppression.
[10] D = outputs overcurrent and short-circuit protected.
[11] D = inputs and output reverse-polarity protected.
[12] With correct mounted IP69K connector.
[13] +100 °C at max 15 minutes.

Certificates

EU declaration of conformity	✓
UK declaration of conformity	✓
Moroccan declaration of conformity	✓
China RoHS	✓
cULus certificate	✓

Classifications

ECLASS 5.0	27270903
ECLASS 5.1.4	27270903
ECLASS 6.0	27270903
ECLASS 6.2	27270903
ECLASS 7.0	27270903
ECLASS 8.0	27270903
ECLASS 8.1	27270903
ECLASS 9.0	27270903
ECLASS 10.0	27270904
ECLASS 11.0	27270904
ECLASS 12.0	27270903
ETIM 5.0	EC001821
ETIM 6.0	EC001821
ETIM 7.0	EC002719
ETIM 8.0	EC002719
UNSPSC 16.0901	39121528

Adjustments

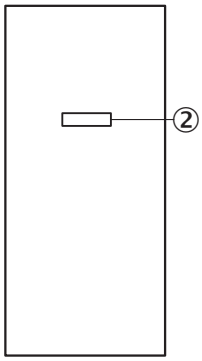

② Sensing range adjustment: Touch-Teach-In

Connection type

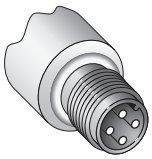

Connection diagram Cd-087

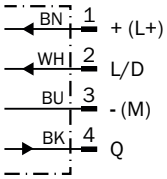

Characteristic curve VTE18V, 450 mm

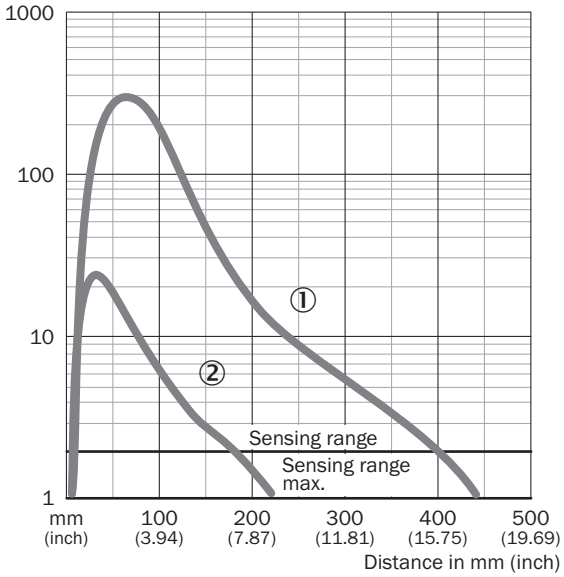

① Sensing range on white, 90% remission factor
② Sensing range on gray, 18% remission factor

Sensing range diagram VTE18V, 450 mm

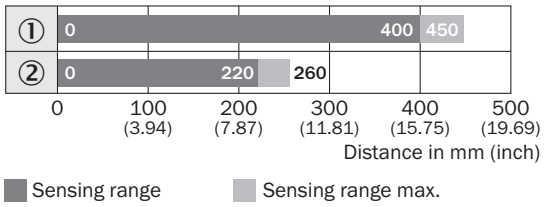

① Sensing range on white, 90% remission factor
② Sensing range on gray, 18% remission factor

Dimensional drawing VTF18V, VTE18V

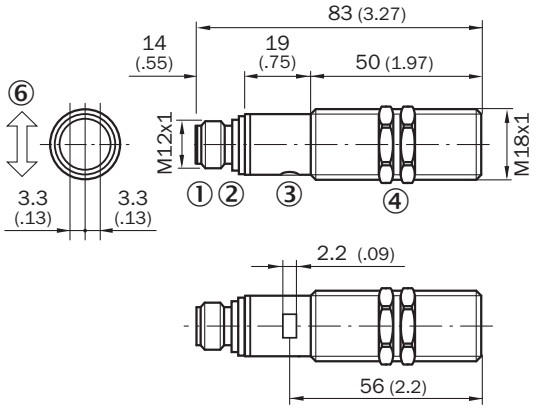

Dimensions in mm (inch)
① M12 male device connector, 4-pin
② Sensing range adjustment: Touch-Teach-In
③ Status indicator LED, green: signalizing Touch-Teach-in
④ Yellow LED indicator:
④ - lights continuously:
④ reception signal> reserve factor 2
④ - blinks: Reception signal< reserve factor 2 but > switching threshold 1
⑤ fastening nuts (2 x); width across 24, stainless steel

Recommended accessories

Other models and accessories ➜ www.sick.com/V18

	Brief description	Type	part no.
connectors and cables			
	• **Connection type head A:** Female connector, M12, 4-pin, straight • **Connection type head B:** Flying leads • **Signal type:** Sensor/actuator cable • **Cable:** 5 m, 4-wire, PVC • **Description:** Sensor/actuator cable, unshielded • **Connection systems:** Flying leads • **Note:** This product is generally resistant to chemical cleaning agents (see ECOLAB). Please do not use cleaning agents of any other Kind., Not resistant against lactic acid & hydrogen peroxide (H2O2) • **Application:** Hygienic and washdown zones	DOL-1204-G05MNI	6052615
	• **Connection type head A:** Female connector, M12, 4-pin, straight • **Connection type head B:** Flying leads • **Signal type:** Sensor/actuator cable • **Cable:** 5 m, 4-wire, PP • **Description:** Sensor/actuator cable, unshielded • **Connection systems:** Flying leads • **Note:** This product is generally resistant to chemical cleaning agents (see ECOLAB) and other chemical compounds such as H2O2 and CH2O2. Before permanent installation is carried out, the material's resistance to the cleaning agent being used must be checked., Resistant against lactic acid & hydrogen peroxide (H2O2) • **Application:** Hygienic and washdown zones, Drag chain operation	DOL-1204-G05MRN	6058476

	Brief description	Type	part no.
Mounting systems			
	• **Description:** Mounting bracket for M18 sensors • **Material:** Stainless steel • **Details:** Stainless steel • **Items supplied:** Without mounting hardware	BEF-WN-M18N	5320947
	• **Description:** Plate N11N for universal clamp bracket • **Material:** Stainless steel • **Details:** Stainless steel 1.4571 (sheet), Stainless steel 1.4408 (clamp) • **Items supplied:** Universal clamp (5322627), mounting hardware • **Usable for:** DeltaPac, Glare, WTD20E	BEF-KHS-N11N	2071081

SICK AT A GLANCE

SICK is one of the leading manufacturers of intelligent sensors and sensor solutions for industrial applications. A unique range of products and services creates the perfect basis for controlling processes securely and efficiently, protecting individuals from accidents and preventing damage to the environment.

We have extensive experience in a wide range of industries and understand their processes and requirements. With intelligent sensors, we can deliver exactly what our customers need. In application centers in Europe, Asia and North America, system solutions are tested and optimized in accordance with customer specifications. All this makes us a reliable supplier and development partner.

Comprehensive services complete our offering: SICK LifeTime Services provide support throughout the machine life cycle and ensure safety and productivity.

For us, that is “Sensor Intelligence.”

WORLDWIDE PRESENCE:

Contacts and other locations –www.sick.com